Operating Manual

INOFlex® VL032 - VL120

Compensating 4-jaw Manual Chuck
(reduced weight and with centrifugal force compensating)

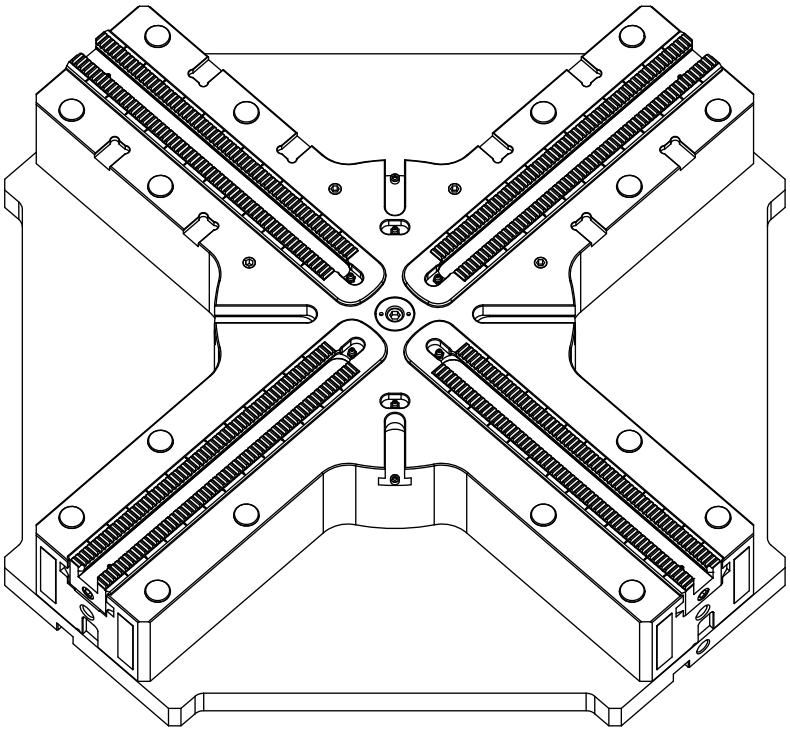

Translation of the Original Operating Manual (German)
Keep for future reference!

Version: 24.01.2025
Edition: G

DE Betriebsanleitung INOFlex® VL032-VL120 - Ausgleichendes 4-Backen-Handspannfutter (gewichtserleichtert und mit Fliehkraftausgleich)

IT Mandrino manuale a 4 griffe con compensazione (a peso ridotto e con compensazione della forza centrifuga)

FR Mandrin de serrage manuel compensé à 4 mors (allégé et avec compensation de la force centrifuge)

ES Plato manual de 4 garras con compensación (de peso reducido y con compensación de la fuerza centrífuga)

HWR Spanntechnik GmbH
Rosa-Luxemburg-Straße 5
D - 28876 Oyten

Telephone: +49 (0) 4207 / 6887-0
E-mail: info@hwr.de
Web: www.hwr.de

The following figure shows the chuck with the embossed data.

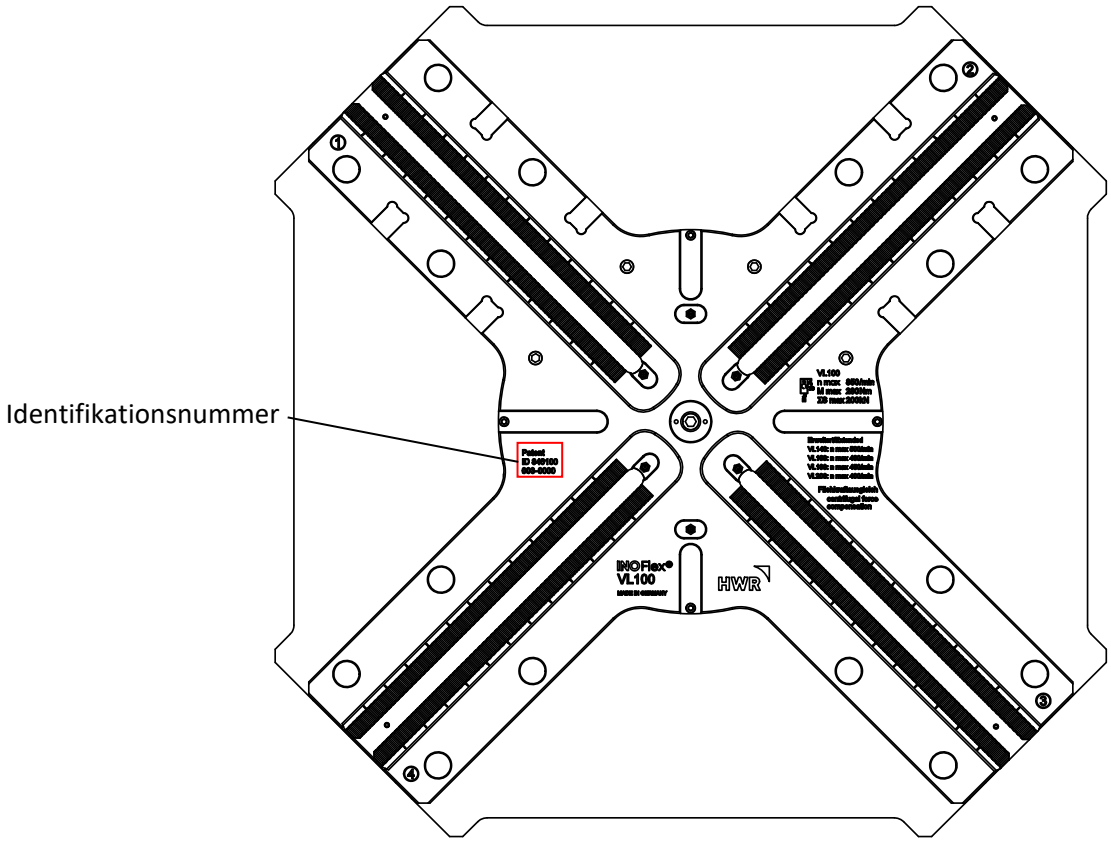

NOTICE

Notice

If you have any questions for HWR Spanntechnik GmbH please hold ready the identification number. Errors and omissions in the documentation are excepted. Please inform HWR Spanntechnik GmbH of any errors in the documentation.

© Copyright

The copyright of this document is retained by HWR Spanntechnik GmbH.

This documentation is designated only for the operating company and its personnel. It contains instructions and information that may not be fully or partially reproduced, distributed nor be transmitted by technical data methods nor be utilized for the purpose of unauthorized competition.

Copyright violations are subject to prosecution under the law.

This operating manual gives you detailed information about the installation, operation and maintenance of the INOFlex® chuck. It includes safety instructions which ensure the safe use of the INOFlex® chuck. You will also find information in this documentation about the scope of delivery and troubleshooting.

With this manual we want to help you get the maximum benefit from your INOFlex® chuck.

The INOFlex® chuck will last long and can be used effectively provided that it is used in an appropriate way and serviced well. The documentation received with the chuck will assist you.

Always keep this operating manual and the other documentation (e.g. manufacturer's documentation) handy and in the immediate vicinity of the machine on which the chuck is used. Make sure to always follow all the information, notices and instructions contained therein. This will prevent accidents caused by incorrect operation, preserve the manufacturer's warranty and always provide you with a fully functioning chuck.

The manufacturer continuously strives to improve his products. He also reserves the right to make any changes and improvements he considers to be necessary. However, this does not include any obligation for retrofitting INOFlex® chucks previously delivered.

⚠ DANGER

General hazard

Before commissioning the INOFlex® chuck you must have read and understood the operating instructions and safety rules contained therein.

Staff has to be instructed according to this operating manual.

Please contact the manufacturer if you still have questions after the briefing and reading the operating manual.

We wish you and your colleagues much success in using the INOFlex® chuck.

HWR Spanntechnik GmbH
Rosa-Luxemburg-Straße 5
D - 28876 Oyten

Telephone: +49 (0) 4207 / 6887-0
E-mail: info@hwr.de
Web: www.hwr.de

Declaration of Incorporation for the Installation of a Partly Completed Machine

In accordance with Directive 2006/42/EC on Machinery; Appendix II B

Manufacturer:	**HWR Spanntechnik GmbH**
Representative for technical documentation:	**Design Department**
Name of the machine:	**Compensating 4-jaw manual chuck**
Machine number:	**INOFlex® VL032 - VL120**

We hereby declare that,

The above partly completed machinery is intended for installation in another machine Commissioning is forbidden until the time when the seller of the completed machine has determined, that:

the complete machine complies with the provisions of the EC Directive 2006/42/EC on machinery and a declaration of conformity in accordance with Appendix II, Part A of the EC Directive 2006/42/EC on Machinery was issued.

the basic safety and health requirements are met for the construction and design of machinery in accordance with Appendix I of the EC Directive 2006/42/EC on Machinery.

the "technical documentation" in accordance with Appendix VII, Part B has been created.

We are committed to provide special technical documentation about the partly completed machinery within a reasonable time in paper form upon reasoned request by the national authorities.

Oyten, 23. January 2025

Henrico Viets
Managing director

Matthias Meier
Managing director

1 SAFETY 1-4

1.1 SCOPE OF THE DOCUMENTATION 1-4

1.2 MANUFACTURER'S INSTRUCTIONS 1-4

1.2.1 Customer service 1-4
1.2.2 Warranty and liability 1-5
1.2.3 Notice on the use of documentation 1-6
1.2.4 Explanation of the pictograms 1-7

1.3 INTENDED USE 1-8

1.3.1 The Sole intended use 1-8
1.3.2 Observe the instructions and rules 1-8
1.3.3 Observe the accident prevention regulations 1-8

1.4 WARNING ABOUT FAULTY OPERATION AND MISUSE 1-8

1.5 INSTRUCTIONS FOR SAFE OPERATION 1-9

1.6 OBLIGATIONS 1-10

1.6.1 Obligation of the operating company 1-10
1.6.2 Requirements for operating / maintenance personnel 1-11

1.7 ACCIDENT PREVENTION REGULATIONS 1-12

1.7.1 General information 1-12
1.7.2 Protection measures taken by the operating company 1-12
1.7.3 Installation and commissioning 1-12
1.7.4 Safety when not in use 1-12
1.7.5 Maintenance and repair 1-13

2 TECHNICAL DESCRIPTION 2-13

2.1 GENERAL INFORMATION 2-13

2.2 OVERVIEW OF THE INOFLEX® CHUCK 2-14

2.2.1 Set-up 2-14
2.2.2 Description of functions 2-15

3 TRANSPORT UND INSTALLATION 3-16

3.1 GENERAL INFORMATION 3-16

3.2 TRANSPORT 3-16

3.2.1 Transport tools 3-16
3.2.2 Instructions on the packaging 3-16
3.2.3 Safety precautions for transport 3-17
3.2.4 Chuck transport with eyebolt 3-18
3.2.5 Inspections after transport / receiving the chuck 3-19

3.3 INSTALLATION 3-19

3.3.1 Space requirement 3-19
3.3.2 Measures prior to installation 3-20
3.3.3 Installation of the chuck (exemplarily) 3-20

3.4 INSERTION OF THE CLAMPING JAWS 3-24

3.4.1 General information 3-24
3.4.2 Installation of top / gripper jaws 3-25

3.5 USING STATIONARY JAWS 3-26

3.5.1 General information 3-26
3.5.2 Mounting of stationary jaws 3-27
3.5.3 Mounting options for stationary jaws 3-28

3.6 FUNCTION CHECK 3-32

4 OPERATION 4-33

4.1 GENERAL INFORMATION 4-33

4.2 PREPARATIONS 4-33

4.3 CLAMPING THE WORKPIECE 4-34

4.3.1 Stroke control 4-35

4.4 REGULAR TASKS DURING OPERATION 4-36

5 MAINTENANCE 5-36

5.1 GENERAL INFORMATION 5-36

5.2 MAINTENANCE 5-36

5.2.1 Maintenance periods 5-36
5.2.2 Inspection work 5-36
5.2.3 Lubricant 5-36
5.2.4 Safety instructions 5-37
5.2.5 Maintenance schedule 5-37
5.2.6 Monitoring of the clamping force 5-38
5.2.7 Monitoring of the base jaw stroke 5-38
5.2.8 Lubrication 5-39

5.3 DISASSEMBLY / CLEANING / RE-ASSEMBLLY OF THE CHUCK 5-40

5.4 WORK AFTER PROLONGED STANDSTILL OF MORE THAN 4 WEEKS 5-43

5.5 DISPOSAL 5-43

6 FAULTS 6-44

6.1 GENERAL INFORMATION 6-44

6.2 IF FAULTS OCCUR 6-44

6.3 POSSIBLE CAUSES OF ERRORS AND TROUBLESHOOTING 6-45

6.3 POSSIBLE CAUSES OF ERRORS AND TROUBLESHOOTING - CONTINUED 6-46

7 TECHNICAL DATA 7-47

7.1 GENERAL INFORMATION 7-47

© Copyright
HWR Spanntechnik GmbH

7.2 GENERAL PRODUCT DATA 7-47

7.3 OPERATING MATERIALS 7-47

7.4 AMBIENT CONDITIONS 7-47

7.5 OTHER DOCUMENTS 7-47

7.6 CLAMPING FORCE / TORQUE DIAGRAMS 7-48

7.7 CLAMPING FORCE/SPEED DIAGRAMS 7-48

7.8 TECHNICAL DATA 7-49

7.9 MOUNTING DIMENSIONS 7-50

7.10 MAXIMUM TIGHTENING TORQUE FOR MOUNTING SCREWS 7-53

8 SPARE PARTS 8-54

8.1 GENERAL INFORMATION 8-54

8.2 BASIC INFORMATION REQUIRED FOR ORDERING SPARE PARTS 8-54

8.3 SPARE PARTS ORDER VIA E-MAIL 8-54

8.4 SPARE PARTS LISTS INOFLEX® VL032 - VL120 8-55

9 NOTES 9-58

9.1 CLAMPING/ACTUATING FORCE DIAGRAM (TEMPLATES) 9-58

1 SAFETY

General information

The operating manual for your INOFlex® chuck contains important instructions for installation, operation, maintenance and troubleshooting. This information will help to ensure the safe operation of your INOFlex® chuck.

All of the required safety instructions and provisions on liability for working with the INOFlex® chuck are included in this chapter. In addition, you will also find instructions here on the intended use of the tool.

WARNING ***Read this operating manual carefully and pay particular attention to this chapter before working with the INOFlex® chuck.***

1.1 SCOPE OF THE DOCUMENTATION

In addition to the safety instructions the operating manual includes:

- A general product description
- Information on installing the INOFlex® chuck
- Instructions on the use and operation of the INOFlex® chuck
- Maintenance and service instructions
- Troubleshooting instructions
- Technical data

The technical documentation also includes the following records:

- An integrated spare parts list
- A declaration of incorporation

1.2 MANUFACTURER'S INSTRUCTIONS

1.2.1 CUSTOMER SERVICE

The manufacturer's contact details are printed on the back of the title page. Please contact the chuck manufacturer immediately in case any questions or problems arise.

NOTICE ***Notice***

Please have the identification number (ID No.) ready if you have any questions for HWR Spanntechnik GmbH.

© Copyright
HWR Spanntechnik GmbH

1.2.2 WARRANTY AND LIABILITY

As a basic principle, our »general sales terms and delivery conditions« do apply. These are made available to the operating company no later than at conclusion of the contract. Warranty and liability claims for personal injury and property damage are excluded if they can be attributed to one or more of the following causes.

- Inappropriate use of the INOFlex® chuck.
- Improper installation, commissioning, operation and maintenance of the INOFlex® chuck.
- Operating the INOFlex® chuck with defective machine safety devices or safety and protective devices that are incorrectly attached or not functioning properly.
- Failure to observe the instructions in the documentation regarding
  - storage
  - installation
  - operation (e.g. correct clamping of the workpiece, observe the max. speed)
  - maintenance and service
  - troubleshooting of the INOFlex® chuck
- Unauthorized modifications to the chuck or to the machine on which the chuck is mounted
- Inadequate monitoring of parts subject to wear
- Improper repairs
- Catastrophes caused by external influence or force majeure.

⚠ DANGER	***Attention*** ***No modifications, additions, or conversions to the INOFlex® chuck are allowed without permission of the manufacturer. All conversion measures require a written confirmation from the manufacturer.***
⚠ WARNING	***Attention*** ***Use only original spare and expendable parts. It cannot be guaranteed that externally procured parts are constructed to meet the required tolerance and safety standards.***
NOTICE	***Note*** ***The manufacturer only provides a full guarantee for the spare parts ordered from him.***

1.2.3 NOTICE ON THE USE OF DOCUMENTATION

Always keep this operating manual and other documents for the INOFlex® chuck in the immediate vicinity of the control unit of the machine in which the chuck is used.

Read this operating manual and make sure to follow the safety instructions before initial use of the tool.

A symbol is used to mark points in the manual which are particularly important.

NOTICE

Note

The training of personnel by the manufacturer is only considered to be a provision of limited information. It does not exempt the user from reading the manual.

© Copyright
HWR Spanntechnik GmbH

1.2.4 EXPLANATION OF THE PICTOGRAMS

The following symbols are used at all key points in this operating manual. Follow these instructions carefully and proceed with caution in these situations.

Identification of the safety instructions:

⚠ DANGER	***This notice indicates injury and/or loss of life if certain rules of conduct are violated. Please take all necessary safety precautions if you see this symbol in the documentation.***
⚠ WARNING	***This notice warns you of material damage, financial and legal ramifications (e.g. loss of rights under warranty, liability claims, etc.).***
⚠ CAUTION	***This notice warns you of material damage to the machine.***
SAFETY INSTRUCTIONS	***This notice warns you of the risk of injury to the hands. Wear gloves when you see this sign in the documentation.***
NOTICE	***Here you will find important notes and information for effective, economical and environmentally sound use.***

1.3 INTENDED USE

1.3.1 THE SOLE INTENDED USE

The INOFlex® chuck VL032 - VL120 is solely intended for the clamping of components for mechanical machining in machine tools (see also Chapter "7" Technical Data).

Any other use is considered improper. The manufacturer is not liable for damages resulting from improper use.

1.3.2 OBSERVE THE INSTRUCTIONS AND RULES

Intended use also includes:

- Following all the instructions in the documentation as well as the manufacturer-supplied documentation (if applicable)
- Compliance with the manufacturer's prescribed service and maintenance conditions and intervals

1.3.3 OBSERVE THE ACCIDENT PREVENTION REGULATIONS

Observe the applicable accident prevention regulations and other generally recognized regulations related to safety.

1.4 WARNING ABOUT FAULTY OPERATION AND MISUSE

The functioning of your INOFlex® chuck has been tested at the factory. However, there are risks associated with faulty operation or misuse, e.g.:

- Risk to life and health of operators, third persons and animals in the vicinity of the machine tool in which the chuck is used
- Risk to the machine tool, the chuck and other property of the operating company
- Risk of losing efficient operation of the machine tool, in which the chuck is installed.

© Copyright
HWR Spanntechnik GmbH

1.5 INSTRUCTIONS FOR SAFE OPERATION

DANGER

Real safety means that you are familiar with all safety instructions. This applies to the type and location of the risk and in particular the protective measures that must be taken. Always remain vigilant and aware of the risk (s) involved.

Malfunctions must be investigated immediately. The operating personnel should consult experts if necessary. Operation may only be resumed if the safety of the INOFlex® chuck and machine tool is absolutely certain.

Operation of the INOFlex® chuck may only be started after the operator has satisfied himself that all maintenance has been performed (as described in this manual).

Should it be determined during operation that pending maintenance was not performed then use must be stopped immediately.

Make sure to observe the permissible room temperature for operation of the INOFlex® chuck machine tool (if specified, see manual of the machine tool).

1.6 OBLIGATIONS

1.6.1 OBLIGATION OF THE OPERATING COMPANY

The operator agrees to only allow those persons to work with the INOFlex® chuck, who

- are familiar with the basic regulations on safety and accident prevention and who have been instructed in the operation of the INOFlex® chuck
- have read and understood the operating manual, the chapter on safety and the warning instructions and who have confirmed this with their signature

The operator is responsible for the selection of the operating personnel. He must pay particular attention to the suitability of the personnel selected for operating a machine tool with the INOFlex® chuck.

The operator always supplies his operating and maintenance personnel with the entire product documentation.

The operator periodically checks the operating and maintenance personnel with respect to safety conscientious work behavior.

The operating company of a machine tool with the INOFlex® chuck must abide by and observe the following rules and regulations:

- The functional limits and safety regulations listed in the technical operating manuals.

⚠ DANGER

The operating company is ultimately responsible for safety. This responsibility cannot be delegated.

⚠ DANGER

When using stationary jaws rotation-free machining is assumed. However, if a turning operation is necessary, the operator must determine the permissible speed according to VDI 3106! In this context, the reduced clamping forces must be taken into account depending on the mounting options for the stationary jaws!

© Copyright
HWR Spanntechnik GmbH

1.6.2 REQUIREMENTS FOR OPERATING / MAINTENANCE PERSONNEL

The operator agrees:

- To only allow trained personnel (specialized in metal) and CNC milling operators to work with the INOFlex® chuck
- To clearly define the responsibilities of personnel charged with installation, commissioning, operation, maintenance and repair
- To only allow personnel being trained to work with the INOFlex® chuck under the supervision of an experienced professional (specializing in metal) or a CNC milling operator.

All persons who are assigned to operate the INOFlex® chuck agree:

- To always ensure the safety of third parties, the INOFlex® chuck and the machine tool
- To read the operating manual, the chapter on safety and the warning instructions and to confirm with their signature that they have understood them
- To observe the basic regulations concerning work safety and accident prevention
- To only use the INOFlex® chuck if they are familiar with the function of the chuck itself and the function of the machine tool and have full control over the corresponding safety and emergency equipment

The operating personnel must be completely focused when working with the machine tool and the INOFlex® chuck.

⚠ DANGER ***These are matters which concern your own safety and the safety of colleagues and bystanders in the vicinity of the machine!***

1.7 ACCIDENT PREVENTION REGULATIONS

1.7.1 GENERAL INFORMATION

Check the operational safety of the INOFlex® chuck each day prior to startup! In addition to the instructions in the documentation, please observe the general, local safety and accident prevention regulations as well.

Faults which occur and impair safety must be eliminated immediately. Damaged parts must be replaced immediately. The machine with the INOFlex® chuck may not be operated until the fault is eliminated.

1.7.2 PROTECTION MEASURES TAKEN BY THE OPERATING COMPANY

Workplace ergonomics

The workstations for the operating personnel must be designed according to ergonomic guidelines. Clear access (prevention of tripping hazards), adequate lighting, etc. (accident prevention regulations, operator workstation safety) must be ensured by the operating company.

Personal protective measures

Personal protective equipment must be worn according to company guidelines and regulations of the employers' liability insurance association (work clothes, anti-slip safety shoes, hair net, etc.).

Machine access

Make sure that unauthorized persons cannot access the work area. This can be accomplished with automatic closing doors which can only be opened with a key or other similar safeguards.

1.7.3 INSTALLATION AND COMMISSIONING

Check to make sure that the chuck is properly inserted and attached in the machine tool.

Before starting the INOFlex® chuck the commissioning personnel must make sure that the INOFlex® chuck is in perfect working condition by conduction mandatory inspections and a trial run!

1.7.4 SAFETY WHEN NOT IN USE

Secure the machine tool with the INOFlex® chuck when it is not in use against operation by unauthorized persons (e.g. with a padlock on the main switch of the machine tool).

Make sure that children are unable to access the INOFlex® chuck and the machine tool.

© Copyright
HWR Spanntechnik GmbH

1.7.5 MAINTENANCE AND REPAIR

Maintenance periods

Perform all required maintenance on time.

Cleaning agents

All surfaces that come into contact with the product must be cleaned with cleaning agents that comply with applicable hygienic or sanitary standards.

Inspection work

The clamping and the rotating parts must be inspected before each use to ensure that they are in perfect working condition. Damaged parts must be replaced immediately with fault-free parts.

Examine the function of all components after completion of maintenance and repair work.

Disposal

Make sure to properly handle and dispose of substances and materials that are used, especially greases and solvents.

2 TECHNICAL DESCRIPTION

2.1 GENERAL INFORMATION

The INOFlex® chuck VL032 - VL120 is intended solely for the clamping of components for mechanical machining in milling machines as well as turning-milling centers (see also Chapter "7" Technical Data).

The chuck is to be used solely in accordance with VDI [Association of German Engineers] 3106, the user manual of the machine tool and this manual.

NOTICE

Note

The chuck is lubricated at the factory before it is shipped.

2.2 OVERVIEW OF THE INOFLEX® CHUCK

2.2.1 SET-UP

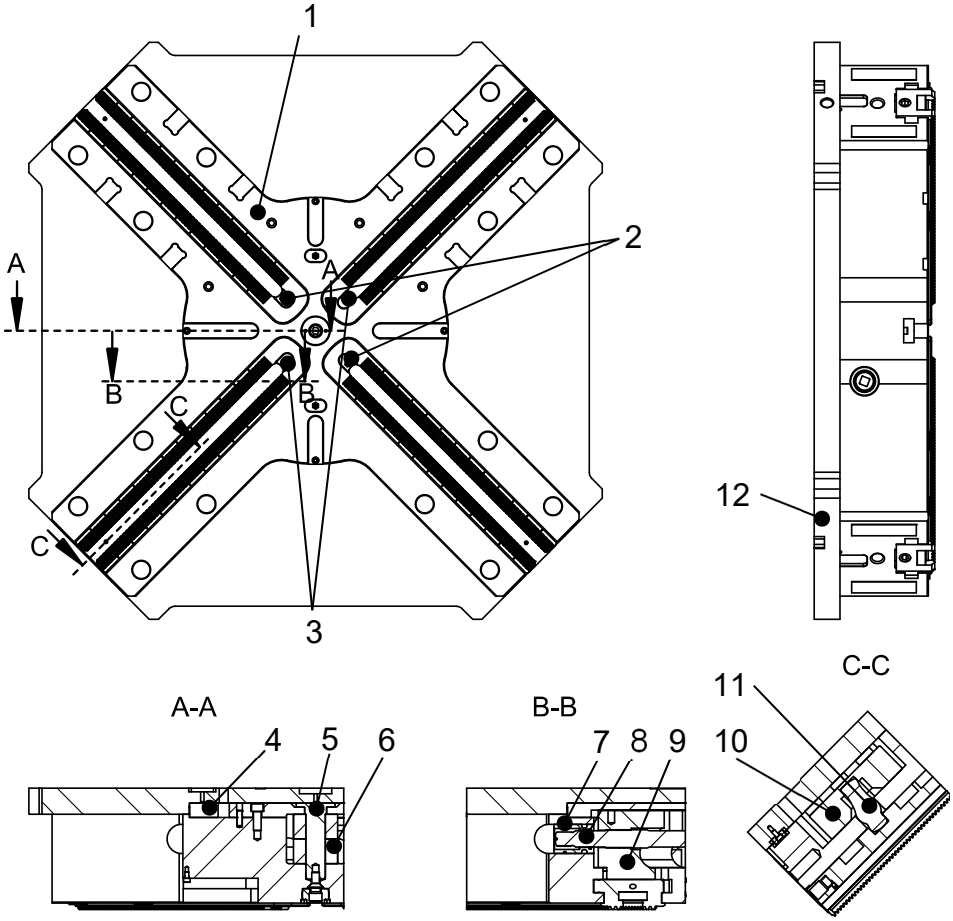

Fig. 2-1: Set-up of the INOFlex®-chuck

1. Upper housing
2. Base jaw 1/3
3. Base jaw 2/4
4. Lower housing
5. Pivot bolt
6. Clamping bone
7. Seal assembly
8. Spindle
9. Parallel slider 2
10. Lever
11. Counterweight
12. Base plate

© Copyright
HWR Spanntechnik GmbH

2.2.2 DESCRIPTION OF FUNCTIONS

After a trained specialist (specializing in metal) or CNC milling operator installs the manual chuck in the machine tool, the same person clamps the workpiece to be machined in the chuck.

The concentric and compensating 4-jaw manual chuck allows clamping of round, cubic and geometrically irregular parts and is also suitable for workpieces which are susceptible to deformation.

The drive of the compensating clamping 4-jaw chuck moves the base jaws (1/3) and (2/4) on two parallel axes / paths toward and away from each other. Compensation is made possible by connecting the diametrical slides with levers or via a sliding gate-type gear.

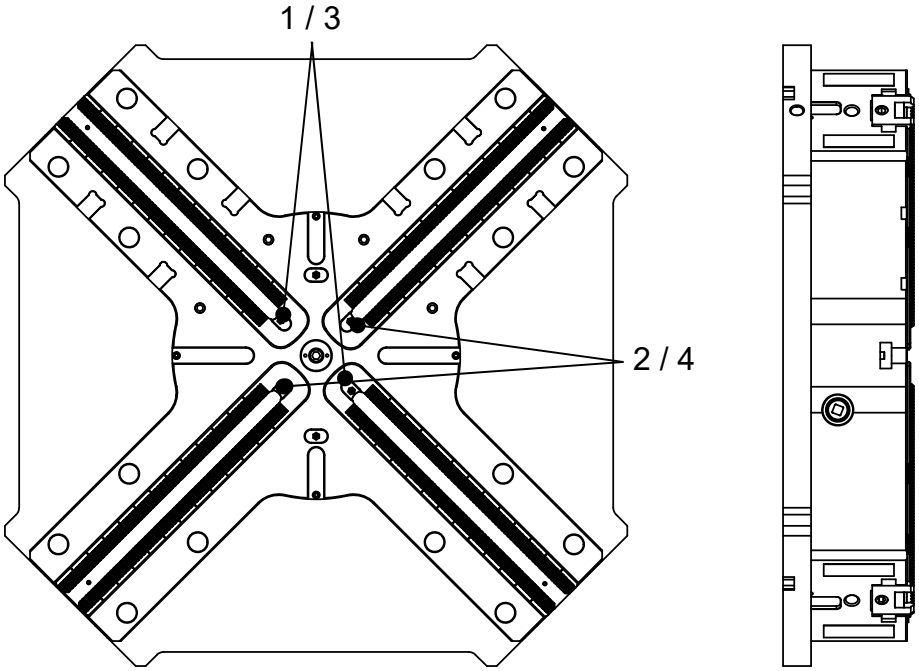

Fig. 2-2: Functions of the INOFlex®-chuck

3 TRANSPORT UND INSTALLATION

3.1 GENERAL INFORMATION

Work in a relaxed and careful manner when installing the chuck. Avoid stress and hectic, as this may lead to working mistakes or even accidents.

Keep all transport routes and the installation area free from interfering objects during the entire work period.

During the installation process observe the operating manual of the machine tool on which the manual chuck is being mounted.

⚠ WARNING ***Also make sure to comply with the regulations and policies of the operating company regarding personal protective equipment (PPE).***

3.2 TRANSPORT

3.2.1 TRANSPORT TOOLS

After delivery, the safely packaged chuck can be transported with the following tools depending on its weight:

- Crane
- Forklift truck or pallet truck

3.2.2 INSTRUCTIONS ON THE PACKAGING

Adhere to the notes and instructions (if any) affixed to the packaging.

© Copyright
HWR Spanntechnik GmbH

3.2.3 SAFETY PRECAUTIONS FOR TRANSPORT

Transport of heavy chucks may only be conducted by specially qualified personnel, if need be with auxiliary tools.

⚠ DANGER ***During transport, there is a risk that the component may tilt, swing or fall. This can result in equipment damage or serious bodily injury.***

The following measures must be taken to prevent equipment damage and life-threatening injuries:

- The chuck may only be lifted on the designated attachment point.
- Please observe the center of gravity and the attachment position of the chuck during pick-up, hanging and transport.
- Load-carrying and lifting equipment must comply with the accident prevention regulations.
- When selecting the load-carrying and lifting equipment make sure to consider the weight of the chuck and if necessary the length of the load arm (e.g. crane boom).
- Make sure to cordon off the transport routes used for the transport of floating loads and mark these routes to keep people off.

⚠ DANGER ***At no time are people allowed to stay under a floating load. Risk of accident!***

3.2.4 CHUCK TRANSPORT WITH EYEBOLT

The eyebolt (DIN 580) supplied at delivery must be used for transportation.

CAUTION ***The permissible load is marked on the eyebolt.***

WARNING ***The thread in the centre of the chuck must not be used for lifting or transporting the chuck.***

Step 1 Prior to transport, screw the eyebolt into the main body of the chuck (see the figure below). Attach the hoist.

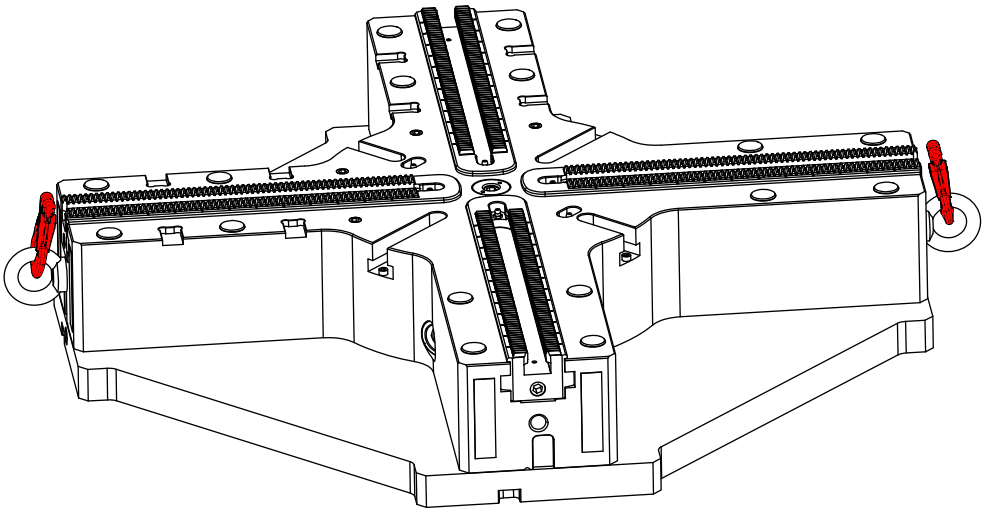

Fig. 3-1: Transport with eyebolts

Step 2 Observe the safety precautions described in section 3.2.3 during transport.

WARNING ***Do not remove the hoist and the eyebolt until the chuck is installed properly in the machine tool.***

© Copyright
HWR Spanntechnik GmbH

3.2.5 INSPECTIONS AFTER TRANSPORT / RECEIVING THE CHUCK

Immediately check the condition of the INOFlex® chuck after receiving it (transport damage).

Inform the shipping company and the manufacturer of the chuck (HWR Spanntechnik GmbH) if any damage has been found. The address and telephone number you will find on the inside of the front cover.

⚠ WARNING ***Damage caused during transportation of the chuck must be repaired completely and properly before commissioning.***

3.3 INSTALLATION

⚠ CAUTION ***Installation of the INOFlex® chuck may only be carried out by personnel who are trained and instructed in the operation of the machine tool.***

3.3.1 SPACE REQUIREMENT

The free space required to install the INOFlex® chuck corresponds with the space requirements of the operator of the machine tool (see corresponding manual of the machine tool).

© Copyright
HWR Spanntechnik GmbH

3.3.2 MEASURES PRIOR TO INSTALLATION

NOTICE ***The base plate of the chuck can be mounted directly on the machine table of the machine tool.***

Step 1 Clean the mounting surfaces of the machine table. No dirt or chips are allowed on any of these surfaces.
Also make sure that all holes are deburred and clean.

Step 2 Use a dial gauge to check the bearing surfaces (machine table) of the chuck for concentricity and axial run-out.
Allowed is 0.05 mm

3.3.3 INSTALLATION OF THE CHUCK (EXEMPLARILY)

NOTICE ***Described here is only an example installation. The precise procedure can vary from case to case. If necessary observe the installation instructions supplied by the manufacturer of the connection.***

NOTICE ***The chuck can be mounted directly on the machine table of the machine tool.***

Step 1 Check to make sure that measures required prior to installation (see Section 3.3.2) are carried out.

Step 2 With the help of the hoist carefully and slowly move the clean base plate (7) (hanging from the eyebolts) over the machine table.

Step 3 Put the centering bolt (8) into the base plate (7) and tighten the bolt with the corresponding fastening screw (9).

Step 4 Put a fitting T-nut (10) in the corresponding slot of the base plate (7) and tighten the T-nut with the corresponding fastening screws.

Step 5 Put the T-nuts (11) in the corresponding slots of the machine table (12).

Step 6 Lower the base plate (7) onto the machine table (12). Hereby the base plate (7) gets aligned by the centering bolt (8) and the fitting T-nut (10).

Step 7 Bolt together the base plate (7) with the machine table (12) by crosswise tightening the fastening screws (5) of the T-nuts (11) with a torque wrench. Afterwards remove the hoist from the base plate (7).

NOTICE ***Please observe the maximum tightening torques for mounting screws (see Table 7-7 on page 7-51).***

© Copyright
HWR Spanntechnik GmbH

Step 8 Check the concentricity and the axial run-out of the base plate. Allowed is 0.05 mm. The measurement is taken from the plain back of the base plate and from the plane surface around the plain back (see Fig. 3-3).

Step 9 Lift the clean chuck (4) (hanging from the eyebolts) carefully and slowly over the base plate (7) by using the hoist.

Step 10 Lower the chuck (4) onto the base plate (7). Hereby the chuck (5) gets aligned by its plain back and a fitting T-nut (6).

Step 11 Bolt together the base plate (7) and the chuck (4) by crosswise tightening the inner and outer fastening screws (2) with a torque wrench.

NOTICE ***Please observe the maximum tightening torques for mounting screws (see Table 7-7 on page 7-51).***

Step 12 Once again check the concentricity and the axial run-out of the base plate. Allowed is 0.05 mm. For this remove the threaded insert (3). The measurement is taken from the clearance hole above the thread and from the plane surface around it(see Fig. 3-4).

Step 13 Cover the boreholes of the outer fastening screws (2) with the caps (1)

⚠ WARNING ***The chuck body must not be distorted.***

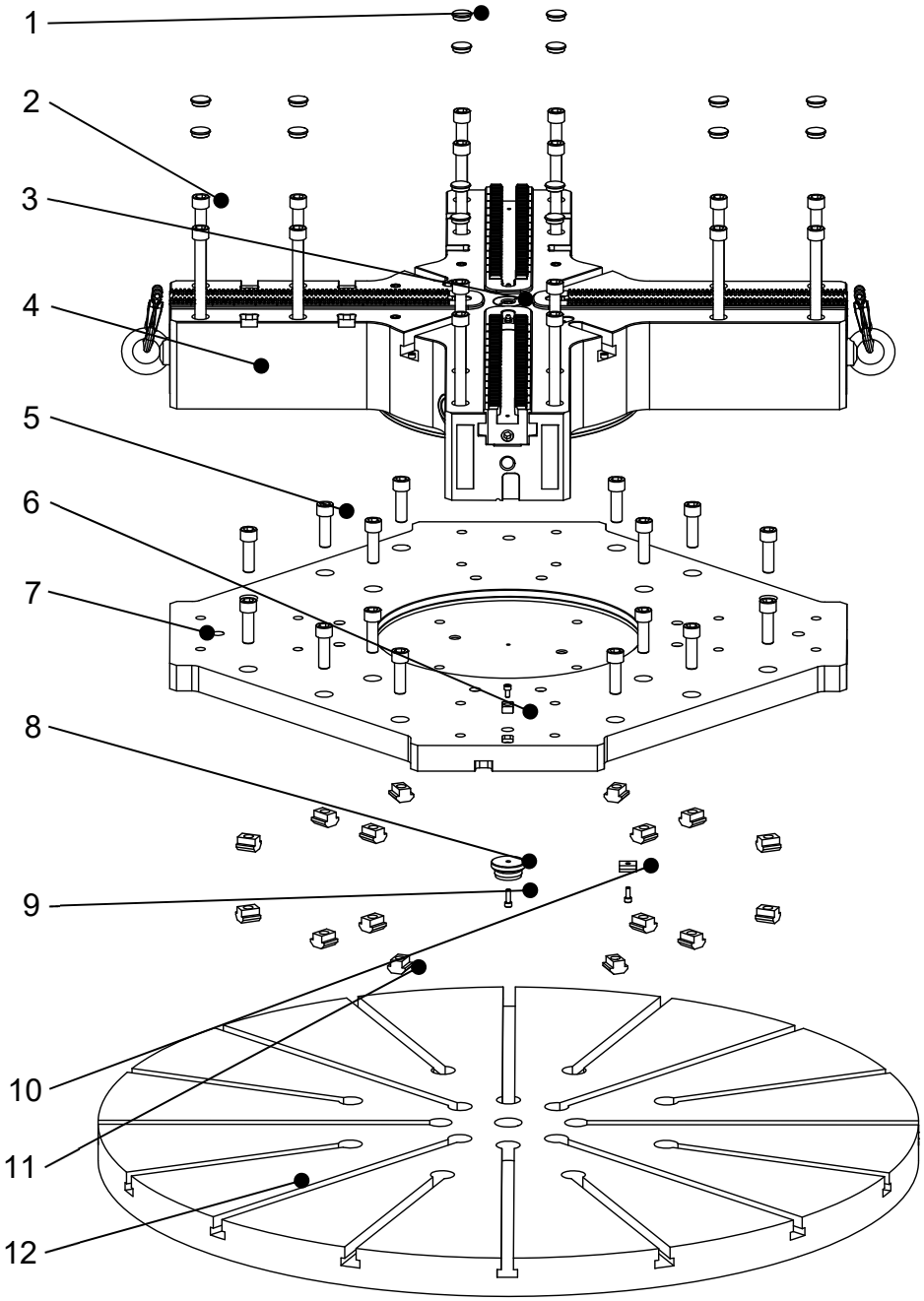

Fig. 3-2: Installation of the chuck

© Copyright
HWR Spanntechnik GmbH

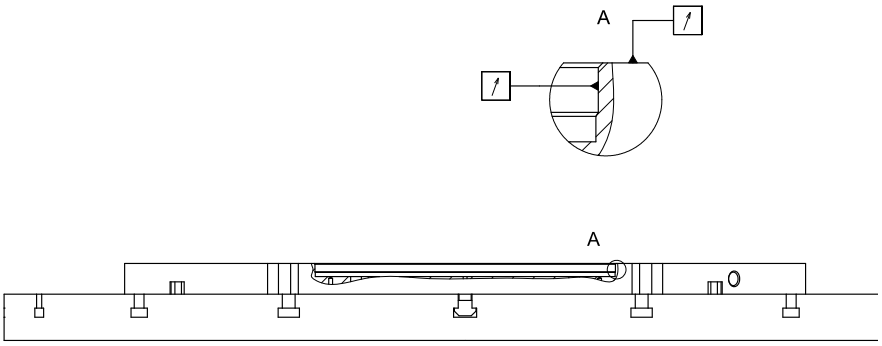

Fig. 3-3: Checking concentricity and axial run-out of the base plate

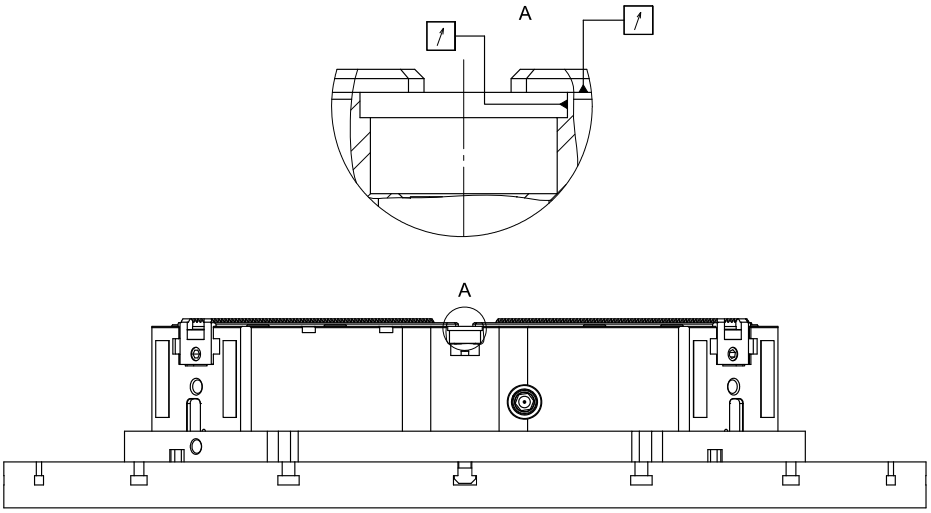

Fig. 3-4: Checking concentricity and axial run-out of the chuck

3.4 INSERTION OF THE CLAMPING JAWS

3.4.1 GENERAL INFORMATION

Top jaws or gripper jaws can be used depending on the workpiece being processed.

NOTICE

The manufacturer recommends the use of original clamping jaws from HWR Spanntechnik GmbH.

The manufacturer does not guarantee performance of externally procured parts.

⚠ WARNING

Consult with the chuck manufacturer HWR Spanntechnik GmbH before you use clamping jaws from a different manufacturer. You also need to carry out a calculation in accordance with VDI 3106 to determine the maximum permissible speed and required clamping force.

© Copyright
HWR Spanntechnik GmbH

3.4.2 INSTALLATION OF TOP / GRIPPER JAWS

Step 1 Insert the sliding block (1) into the chuck with the bevelled end towards the center.

Step 2 Put the clamping jaw onto the serration (2) and screw-in two cylinder screws (3) each of strength class 12.9.

⚠ WARNING

Make sure the serration is free from any dirt. Allocate the clamping jaw-number to the corresponding base jaw number.

Ensure sufficient screw-in depth (min. 1.25 x thread diameter)

Step 3 First tighten the screw (3) at the non-bevelled end of the sliding block with a torque wrench and afterwards the screw (3) at the bevelled end.

NOTICE

Please observe the maximum tightening torques for mounting screws (see Table 7-11on page 7-51).

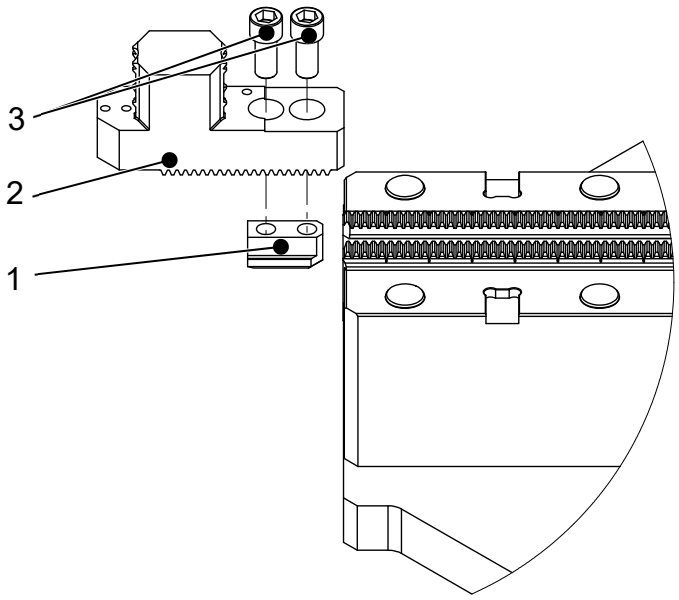

Fig. 3-5: Installation of jaws

3.5 USING STATIONARY JAWS

3.5.1 GENERAL INFORMATION

Depending on the workpiece that is to be processed, one or two stationary jaws can be used.

⚠ DANGER

When using stationary jaws, rotation-free machining is assumed. However, if a turning operation is necessary, the operator must determine the permissible speed according to VDI 3106! In this context, the reduced clamping forces have to be taken into account, depending on the mounting possibilities of the stationary jaws!

⚠ WARNING

By using a stationary jaw the max. allowed tightening torque of the chuck divides by half!!!

The allowed tightening torque of the stationary jaw used is signed on each stationary jaw.

⚠ DANGER

Excessive tightening torque can lead to damage of the chuck and consequently to insecure clamping!

© Copyright
HWR Spanntechnik GmbH

3.5.2 MOUNTING OF STATIONARY JAWS

Step 1 Remove the caps and bolts or threaded pins, which are to be used for the mounting of the stationary jaws, from the bore holes.

Step 2 Insert the stationary jaw (3) with the mounted flat T-nut (2) into the fix stop groove (1).

⚠ WARNING

Make sure that all contact surfaces are clean.

Make sure of sufficient screw-in depth of the bolts (min. 1.25 x thread diameter) .

Step 3 Mount the stationary jaw on the chuck with the four bolts (4) that have been put aside before. Tighten the bolts with a torque wrench.

⚠ WARNING

Stationary jaws always must be mounted with four tightening bolts.

NOTICE

Observe the maximum tightening torques for fastening bolts (see table 7-7 on page 7-51).

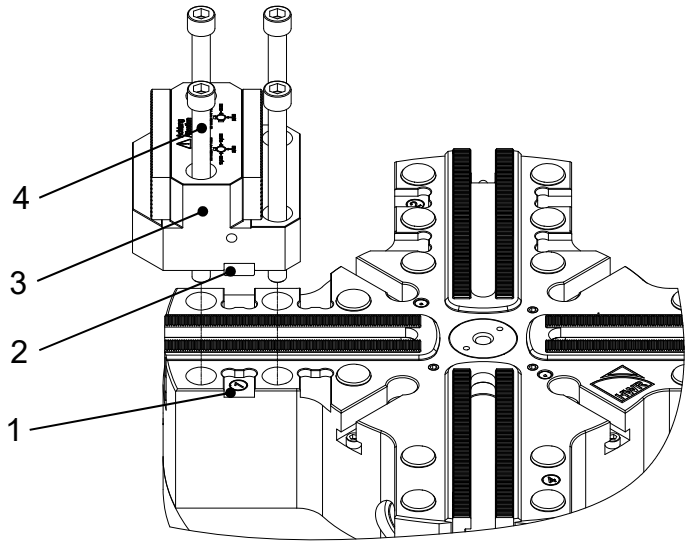

Fig 3-6: Mounting of stationary jaws

3.5.3 MOUNTING OPTIONS FOR STATIONARY JAWS

A One stationary jaw and one movable top jaw

The movable top jaw (2) which is mounted on the base jaw presses the workpiece against the stationary jaw (1). The other two base jaws remain unused.

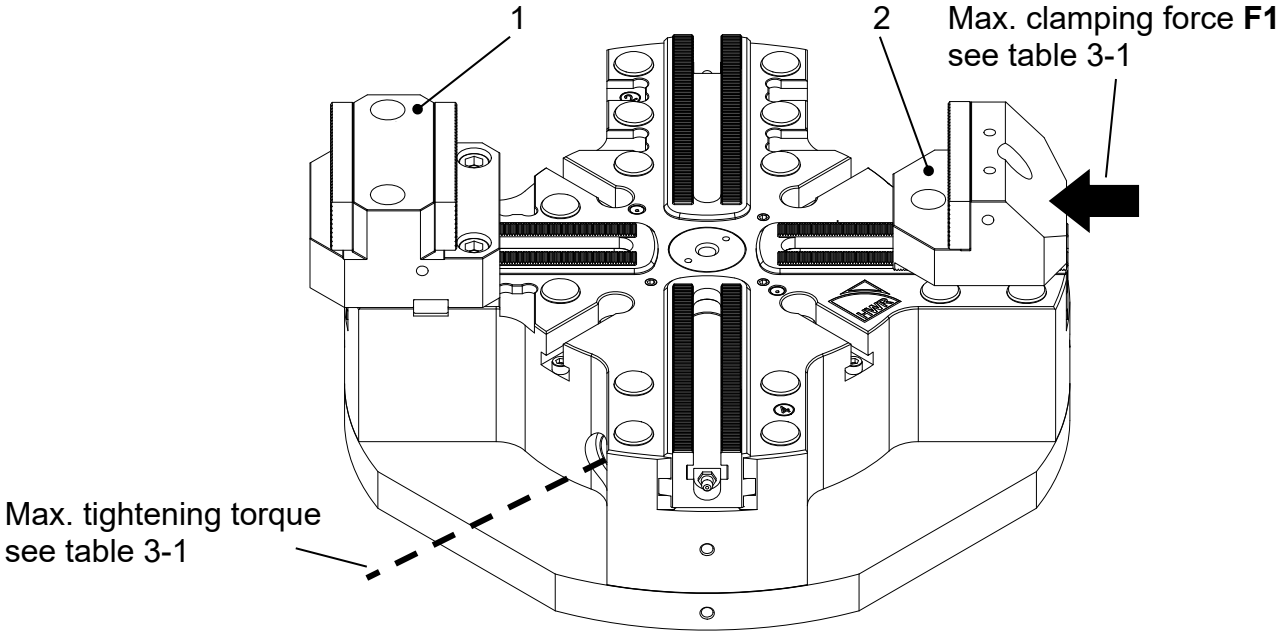

Fig. 3-7: One stationary jaw and one movable top jaw

Chuck size	max. spindle tightening torque [Nm]	max. clamping force F1 [kN]	max. speed n [min^{-1}]
VL032	45	25	*
VL042	72,5	2735	*
VL060	92,5	33,75	*
VL070	92,5	33,75	*
VL080	92,5	33,75	*
VL091	140	50	*
VL100	140	50	*
VL120	140	50	*

Table 3-1: Tightening torque, clamping forces and speed

* The maximum speed must be determined by the operator in accordance with VDI 3106!

With the reduced spindle tightening torque the movable top jaw presses the workpiece with 50% of the possible total clamping force against the stationary jaw.

© Copyright
HWR Spanntechnik GmbH

Example:

Chuck type:	INOFlex® VL070
Max. spindle tightening torque:	185 Nm
Max. total clamping force:	135 kN

- When using a stationary jaw the max. tightening torque must be halved to **92,5 Nm**.
- Owing to the reduced tightening torque the total clamping force is also halved to **67,5 kN**.
- It shows that 50% of this force go into the movable top jaw. Thus the top jaw presses against the stationary jaw with a force of **33,75 kN**.

B One stationary jaw and three movable top jaws

The top jaw (2) which is mounted on the base jaw presses the workpiece against the stationary jaw (1). Additional top jaws (3) are mounted on the other two base jaws which press against each other concentrically.

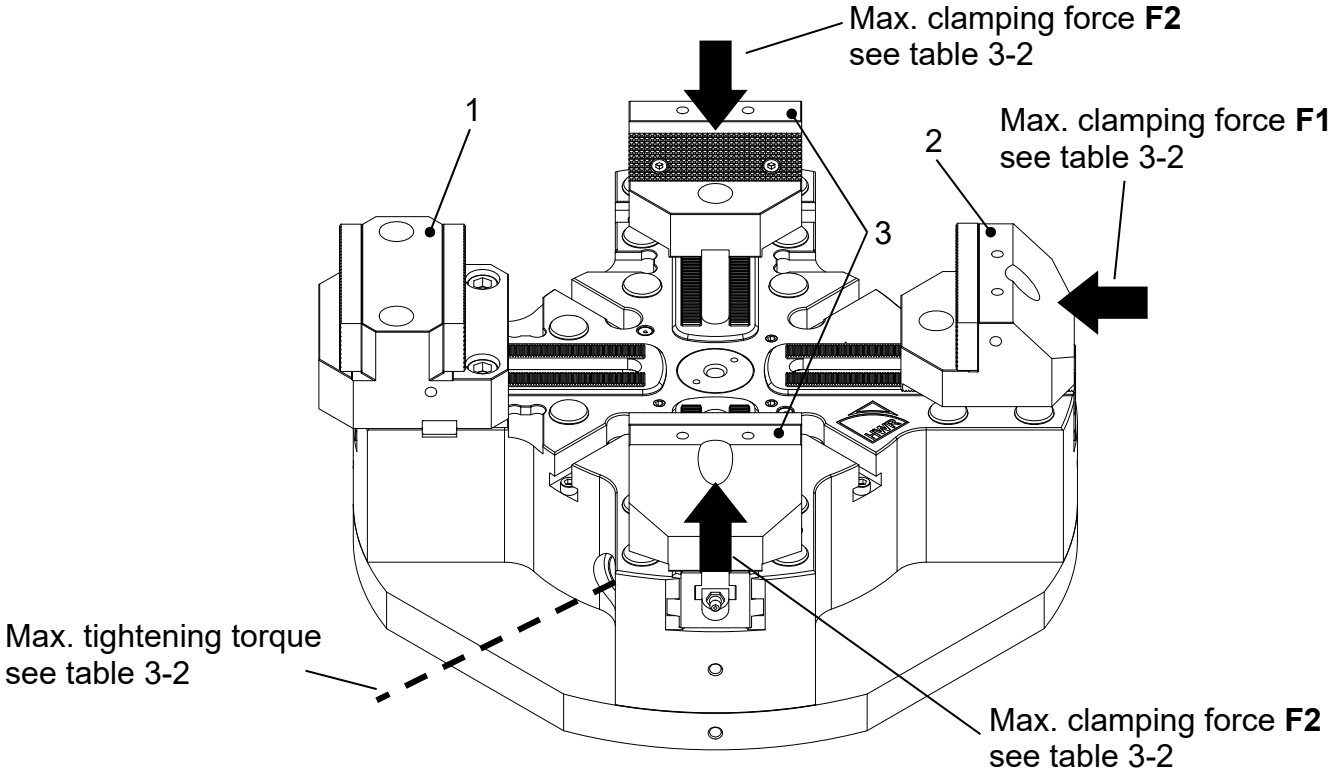

Fig. 3-8: One stationary jaw and three movable top jaws

Chuck size	max. Spindle-tightening torque [Nm]	max. clamping force F1 [kN]	max. clamping force F2 [kN]	max. speed n [min^{-1}]
VL032	45	25	12,5	*
VL042	72,5	27,5	13,75	*
VL060	92,5	33,75	16,875	*
VL070	92,5	33,75	16,875	*
VL080	92,5	33,75	16,875	*
VL091	140	50	25	*
VL100	140	50	25	*
VL120	140	50	25	*

Table 3-2: Tightening torques, clamping forces and speed

* The maximum speed must be determined by the operator in accordance with VDI 3106!

With the reduced spindle tightening torque the movable top jaw presses the workpiece with 50% of the possible total clamping force against the stationary jaw. The two ther top jaws each press with 25% of the possible total clamping force against each other.

Example:

Chuck type: INOFlex® VL070
Max. spindle tightening torque: 185 Nm
Max. total clamping force: 135 kN

- When using a stationary jaw the max. tightening torque must be halved to **92,5 Nm**.
- Owing to the reduced tightening torque the total clamping force is also halved to **67,5 kN**.
- It shows that 50% of this force go into the movable top jaw opposite the stationary jaw. Thus the top jaw presses against the stationary jaw with a force of **33,75 kN**.
- The other two top jaws each press with 25% of the otal clamping force against each other, i.e. each with **16.875 kN**.

© Copyright
HWR Spanntechnik GmbH

C Two stationary jaws and two movable top jaws

The workpiece is being pressed against two stationary jaws (1) by two top jaws (2) which are mounted on the base jaws.

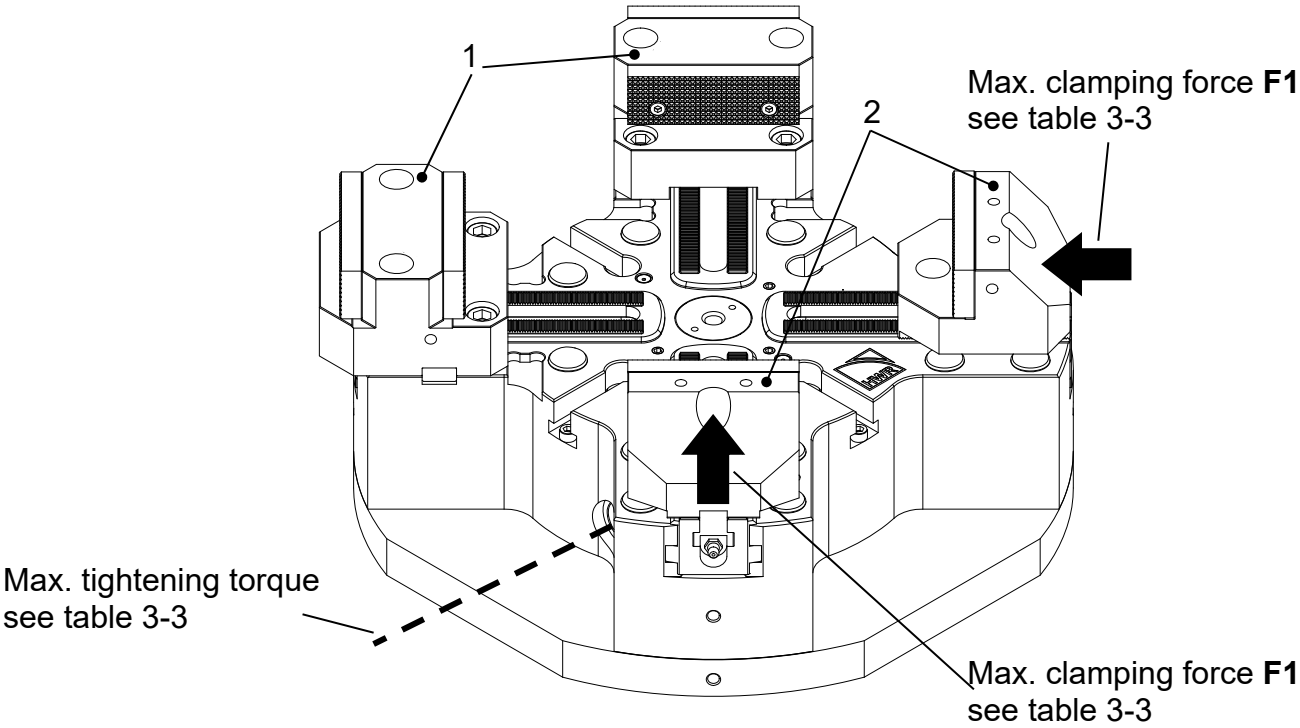

Fig. 3-9: Two stationary jaws and two movable top jaws

Chuck size	max. Spindle tightening torque [Nm]	max. clamping force F1 [kN]	max. speed n [min^{-1}]
VL032	45	25	*
VL042	72,5	27,5	*
VL060	92,5	33,75	*
VL070	92,5	33,75	*
VL080	92,5	33,75	*
VL091	140	50	*
VL100	140	50	*
VL120	140	50	*

Table 3-3: Tightening torques, clamping forces and speed

* The maximum speed must be determined by the operator in accordance with VDI 3106!

With the reduced spindle tightening torque the movable top jaws press the workpiece with 50% of the possible total clamping force against the opposite stationary jaw.

Example:

Chuck type:	INOFlex® VL070
Max. spindle tightening torque:	185 Nm
Max. total clamping force:	135 kN

- When using a stationary jaw the max. tightening torque must be halved to **92,5 Nm**.
- Owing to the reduced tightening torque the total clamping force is also halved to **67,5 kN**.
- It shows that 50% of this force go into each movable top jaw. Thus each movable top jaw presses against the opposite stationary jaw with a force of **33,75 kN**.

3.6 FUNCTION CHECK

The function of the chuck must be checked after installation and before commissioning. Pay particular attention to the clamping force at this time:

- Carry out a calculation of the permissible speed according to the VDI 3106 guideline.
- Measure the clamping force with a suitable clamping force meter on 2 jaws (1/2 total clamping force).

© Copyright
HWR Spanntechnik GmbH

4 OPERATION

4.1 GENERAL INFORMATION

In this chapter you will find information on how to operate the INOFlex® chuck.

⚠ WARNING ***Also make sure to comply with the regulations and policies of the operating company (e.g. regarding personal protective equipment (PPE)).***

⚠ WARNING ***In addition, observe the operating instructions of the machine tool in which the chuck is installed.***

4.2 PREPARATIONS

Step 1 Check to make sure that the chuck is properly installed on the machine tool.

Step 2 Make sure that a functional test was carried out (see chapter 3.5).

4.3 CLAMPING THE WORKPIECE

⚠ WARNING

Make sure the machine tool is in proper working condition before turning on the machine and before operation of the chuck.

⚠ DANGER

If the max. speed of the turning-/milling centre is higher than the max. permissible speed of the chuck then a speed restrictor must be installed in the machine. Excessive operating speed of the chuck and therefore excessive centrifugal force must never be allowed. Otherwise there is a risk that the workpiece is not clamped properly.

Step 1 Clamp the workpiece with a torque wrench and by turning the spindle (1).

NOTICE

Pay attention to the maximum speed of the spindle (1) (see marking on the upper housing and table 7-5 on page 7-47.

Step 2 Check the stroke controls (2) to make sure the workpiece is clamped securely (see chapter 4.3.1)

⚠ DANGER

An unsafely clamped workpiece increses the risk of accidents by falling off.

Step 3 Pull off the torque wrench after clamping the workpiece.

⚠ DANGER

According to EN 1550 the spindle of the machine tool may not start until the torque wrench is removed from the chuck.

© Copyright
HWR Spanntechnik GmbH

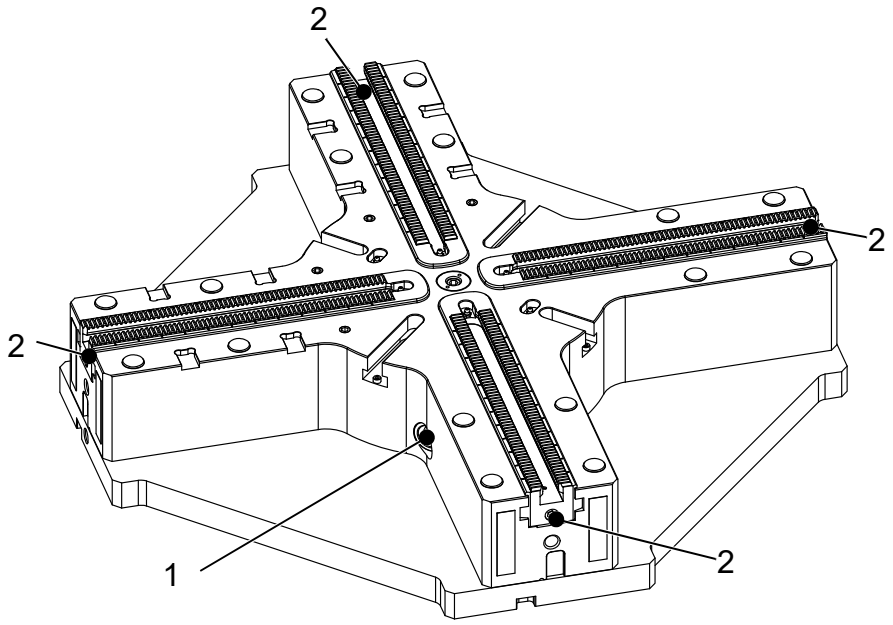

Fig. 4-1: Clamping the workpiece

Step 4 After correct clamping of the workpiece start operating the machine according to the operating manual of the machine tool. Do not exceed the permissible speed.

4.3.1 STROKE CONTROL

When the workpiece is clamped the rear edge of the base jaw has to be between the inner and outer area as shown in Fig. 4-2. This eliminates the possibility that the base jaw abuts before the workpiece is securely clamped.

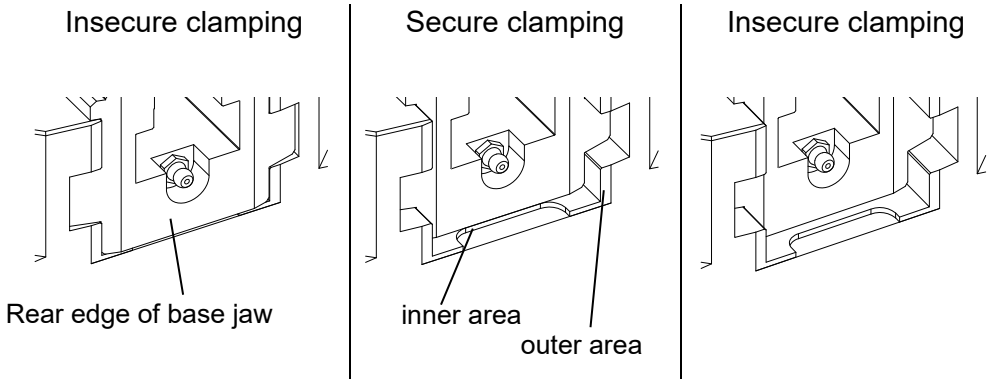

Fig. 4-2: Stroke control

4.4 REGULAR TASKS DURING OPERATION

- Carry out visual inspections for contamination on a regular basis. If necessary stop operation and clean the chuck / machine (see Chapter 5 "Maintenance").
- In addition, observe the operating manual of the machine tool.

5 MAINTENANCE

5.1 GENERAL INFORMATION

Regular maintenance and service intervals must be maintained in order to ensure trouble-free operation of the INOFlex® chuck and the machine tool. This includes a test of functions and a visual inspection for damage and wear.

⚠ WARNING ***In addition, observe the operating instructions of the machine tool in which the chuck is installed.***

Keep ready the required materials for cleaning the chuck.

5.2 MAINTENANCE

5.2.1 MAINTENANCE PERIODS

Perform all required maintenance on time.

5.2.2 INSPECTION WORK

The load bearing and the moving parts must be checked before each use to ensure they are in perfect working condition. Damaged parts must be replaced immediately by fault-free parts.

⚠ WARNING ***Repair and replacement work on the INOFlex® chuck may only be carried out by personnel who are trained and instructed in the operation of the machine tool.***

Examine the function of all safety devices on the machine after completion of maintenance and repair work. Protective cladding and protective covers must be installed correctly.

5.2.3 LUBRICANT

Use only the special lubricating grease OKS 265 from HWR Spanntechnik GmbH (or other grease accepted by HWR).

© Copyright
HWR Spanntechnik GmbH

5.2.4 SAFETY INSTRUCTIONS

Switch-off the machine tool and secure the machine against restarting (see operating manual of the machine tool) prior to conducting maintenance and service work.

5.2.5 MAINTENANCE SCHEDULE

Prior to each use of the chuck
Visual inspection of condition and function
Table 5-1: Maintenance work prior to each use

During ongoing operation
Regular visual inspection for contamination
Table 5-2: Maintenance work during ongoing operation

After each use of the machine
Manual cleaning
Table 5-3: Maintenance work after each use

Maintenance work	All VL-typs
Operating the chuck several times at full stroke without the work-piece to build up a lubricating film and achieve the full clamping force	daily
Clamping force check with suita-ble clamping force measuring de-vice: measured over 2 jaws (1/2 total clamping force) or over 4 jaws	All 4 weeks
Checking the base jaw stroke	All 4 weeks
Table 5-4: Maintenance work after operating time	

DANGER ***The chuck must be provided with sufficient grease. Otherwise clamping force will be lost. Risk of accident!***

5.2.6 MONITORING OF THE CLAMPING FORCE

According to the maintenance schedule, the clamping force of the chuck must be checked regularly. Use a suitable measuring device with to measure the clamping force using 2 jaws (1/2 total clamping force) or 4 jaws.

NOTICE ***The total clamping force results from the sum of the clamping forces of each base jaw.***

⚠ DANGER ***The achieved clamping force can change after prolonged operation of the chuck.***

Procedure for excessive clamping force

Increasing the measured clamping force, in comparison to the value specified in chapter 7.8, does not constitute a malfunction of the chuck. If the clamping force is more than 10% above the value specified in chapter 7.8, the operator must record and use a new characteristic curve for the relationship between tightening torque and clamping force (template in chapter 9.1).
The tightening torque of the chuck must be reduced in this case so that the maximum clamping force specified in chapter 7.8 is not exceeded.

Procedure for insufficient clamping force

If the clamping force is more than 15% below the value specified in chapter 7.8, the chuck must be re-lubricated (see chapter 5.2.8).
If the desired total clamping force is not achieved even after lubricating all grease nipples, then the chuck must be disassembled and completely cleaned (see chapter 5.3).
If the total clamping force cannot be achieved even after complete cleaning, including relubrication of the chuck, the chuck must be sent to the manufacturer for inspection.

5.2.7 MONITORING OF THE BASE JAW STROKE

According to the maintenance plan, the stroke of the base jaws must be checked regularly. The values from the technical specifications (chapter 7.8) serve as a reference.
If the measured stroke per base jaw does not align with the table value, the chuck must be disassembled and completely cleaned (see chapter 5.3).
If the required stroke per base jaw cannot be achieved even after complete cleaning, the chuck must be sent to the manufacturer for inspection.

© Copyright
HWR Spanntechnik GmbH

5.2.8 LUBRICATION

NOTICE

The chuck is lubricated at the factory before it is shipped. To maintain the required clamping force the chuck MUST be re-greased with a metered amount of grease. For lubrication intervals see Table 5-4 on page 5-36

NOTICE

Use only the special lubricating grease OKS 265 from HWR Spanntechnik GmbH (or other grease accepted by HWR).

The chuck must be lubricated when open.

Depending on the operating hours of the chuck lubricate the six grease nipples (1) with the grease.

⚠ WARNING

Too little/too much grease causes a loss of clamping force and increases the risk of accidents.

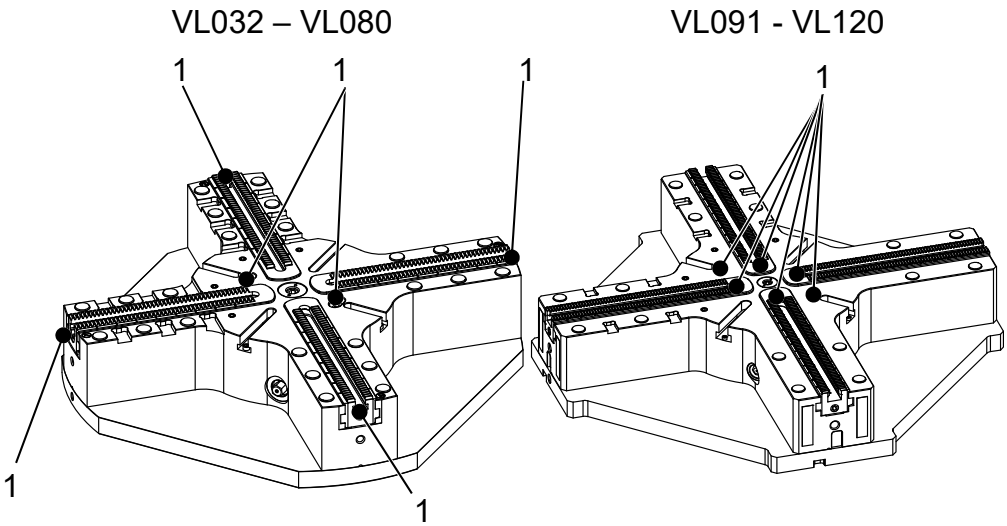

Fig. 5-1: Grease nipples

5.3 DISASSEMBLY / CLEANING / RE-ASSEMBLLY OF THE CHUCK

To ensure proper clamping force, the chuck must be disassembled at regular intervals, cleaned and greased again.

NOTICE ***Disassembly and cleaning intervals see Table 5-4 on page 5-36.***

Disassembly and cleaning

Step 1 Loosen and remove the caps (1), the threaded pin (4), the threaded insert (5) and the screws (6 & 22).

Step 2 Pick up the chuck by the upper housing (2) and lift it up from the base plate (16) (using eyebolts and hoist).

Step 3 Put the chuck on a suitable underlay so that the base jaws (3 & 7) are clear.

Step 4 Loosen and remove the screws (11) and the tabs (10).

Step 5 Remove the counterweights (9) and the levers (8).

Step 6 Loosen and remove the cylinder pins (14) and screws (15)

Step 7 Pull out the pivot bolt (17).

Step 8 Remove the lower housing (13). If need be use four of the fastening screws (15) for pushing it out at the outer boreholes of the lower housing (13).

Step 9 Remove the cylinder pins (18).

Step 10 Remove the seal-kit (20), shaft- seal (21) and O-ring (19) together as one unit. Check the condition and the functioning of the shaft-seal (21) and the O-ring (19). (If necessary replace it before re-assembly of the chuck).

Step 11 Lift out the entire parallel slide unit (12) by gently lifting and tilting it.

NOTICE ***Make sure to consult the manufacturer regarding an appliance.***

Step 12 Remove the base jaws (3 & 7)

Step 13 Clean all the chucks' components. Use a degreaser if necessary.

Step 14 Check all the components. Damaged parts must be replaced. Contact the manufacturer in case you are uncertain.

© Copyright
HWR Spanntechnik GmbH

Re-assembly

Step 1 Re-assemble the chuck in the reverse order to the procedure that was used for disassembly.

Step 2 Lubricate the chuck on the six grease nipples (see chapter 5.2.6).

Step 3 Check the clamping force with a suitable clamping force meter: measure on 2 jaws (1/2 total clamping force)

WARNING ***The initial clamping force measured after greasing may lie below the specified values.***

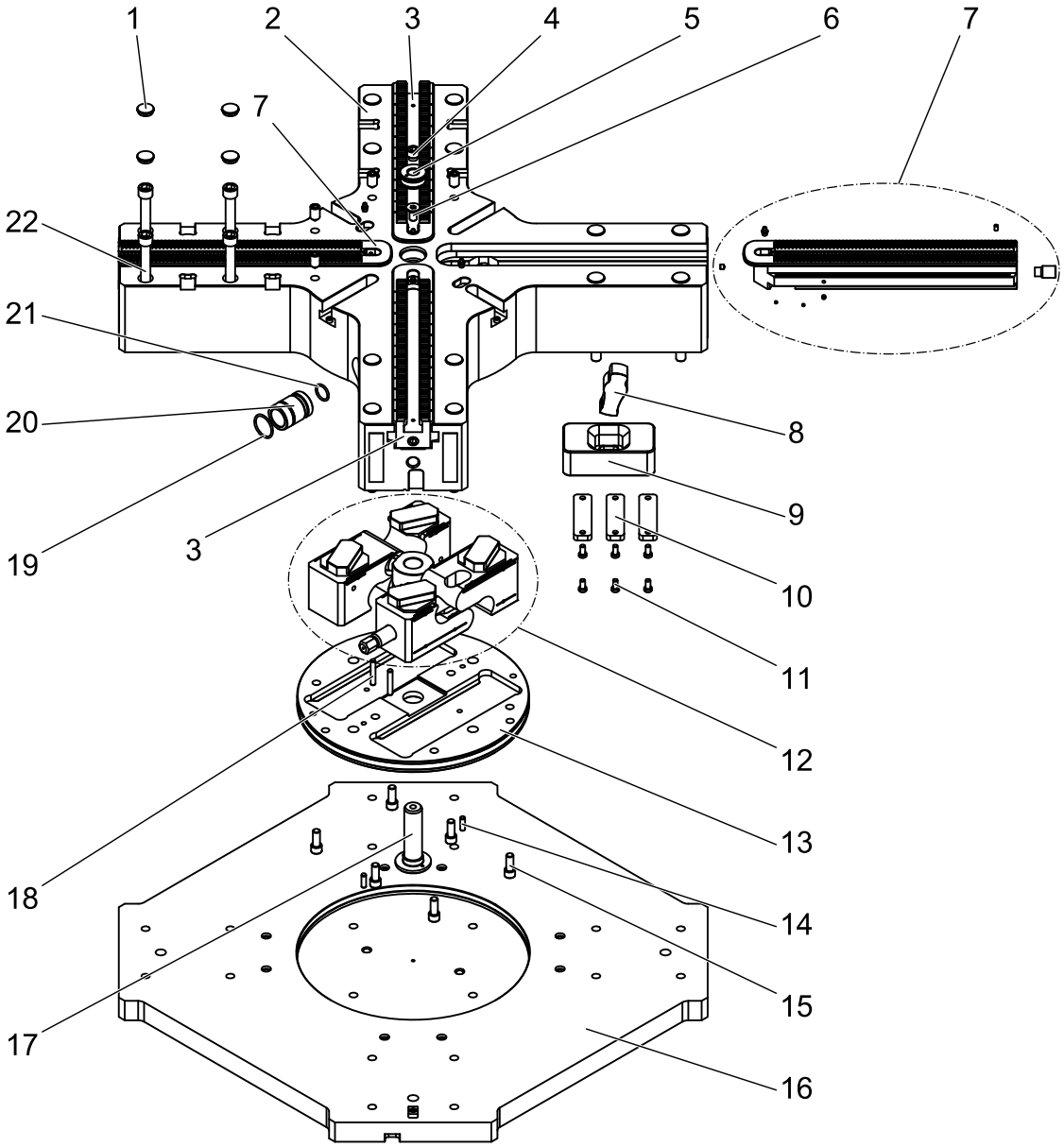

Abb. 5-2: Disassembly / Re-Assembly of the chuck

© Copyright
HWR Spanntechnik GmbH

5.4 WORK AFTER PROLONGED STANDSTILL OF MORE THAN 4 WEEKS

The technical maintenance personnel must carry out the following work before each startup after a longer standstill phase of more than 4 weeks:

after a standstill period of more than 4 weeks
Visual inspection of the condition and function of the chuck
Disassembling and cleaning of the chuck (see chapter 5.3)

Table 5-5: After a long period of standstill

5.5 DISPOSAL

Have a trained expert dismantle and break down the chuck into its individual components.

Properly handle and dispose of substances and materials used in accordance with the national laws, especially greases and solvents.

6 FAULTS

6.1 GENERAL INFORMATION

This chapter describes the course of action in the event of a fault.

6.2 IF FAULTS OCCUR

Step 1 Switch-off the machine tool and secure the machine against re-starting (see manual of the machine tool) prior to troubleshooting.

Step 2 Eliminate the fault.

SAFETY INSTRUCTIONS

Repair and replacement work on the INOFlex® chuck may only be carried out by personnel who are also trained and instructed in the operation of the machine tool.
Before restarting the chuck or the machine the person responsible for the machine must ensure that:

- ***Repair work is completed***
- ***The chuck is securely installed in the machine tool***
- ***The overall machine is in safe working condition***

Also observe the safety instructions in Chapter 1 of this manual and the manual of the machine tool regarding repairs.

Step 3 Resume operation of the machine tool.

⚠ WARNING

Please observe Chapter 4 of this manual and also the manual of the machine tool when restarting the chuck and the machine.

© Copyright
HWR Spanntechnik GmbH

6.3 POSSIBLE CAUSES OF ERRORS AND TROUBLESHOOTING

Error	Cause	Troubleshooting
Jaw (s) is (are) stuck in the guide track	Base jaw deformed, contact surfaces and top jaw not plane soiled or damaged	Check top jaw, clean and replace if necessary.
	Base jaw deformed, tightening torque of the mounting screws too high	Comply with the prescribed tightening torque.
	Base jaw deformed	Follow the sequence of tightening sliding block screws (s. 3.4.2)
	Original jaw (s) not used	Use original jaws.
Concentricity error	Jaws not properly turned or milled	Turn or mill top jaws again.
	Jaw inserted in the wrong guide track	Insert the jaw into the guide track with the appropriate identification.
	Base jaws soiled or damaged	Clean or replace the base jaws.
	Mounting screws for the top jaws are too short, too long or overstretched	Check screw depth, replace screws, and observe torque.
	Projection of the top jaws too large	Change the top jaws or clamping method.
	Chuck damaged or worn	Send the chuck for inspection to the manufacturer (HWR Spanntechnik GmbH).
Loss of clamping force	Short jaw stroke with large number of identical workpieces Inadequate lubrication film	Actuate the full stroke of the chuck repeatedly without workpiece for buildup of the lubrication film and to reach full clamping force.
	Insufficient lubrication Lubricant	Lubricate the chuck. Check lubricant and replace if necessary.
	Soiled chuck	Dismantle, clean and lubricate the chuck.
	Impaired function of the chuck	Check all components, replace damaged parts with original parts, send chuck to the manufacturer (HWR clamping GmbH) for inspection and repair.

Table 6-1: Causes of error and troubleshooting

6.3 POSSIBLE CAUSES OF ERRORS AND TROUBLESHOOTING - CONTINUED

Error	Cause	Troubleshooting
Strong vibration of the machine table	Imbalance from the workpiece or top jaws	Change / rework top jaws or add weight to the body of the chuck.
	Imbalance on: • machine table • drive • base plate	Check the concentricity of various components in stages. Align, balance or replace components.
	Imbalance caused by collision	Send the chuck for inspection and repair to the manufacturer (HWR Spanntechnik GmbH).
Table 6-1: Causes of error and troubleshooting [continued]		

© Copyright
HWR Spanntechnik GmbH

7 TECHNICAL DATA

7.1 GENERAL INFORMATION

All important technical data for the INOFlex® manual chuck is included in this chapter. The data is listed in tables and structured according to individual sizes.

7.2 GENERAL PRODUCT DATA

Operating period	12 hrs/day
Service life	25,000 operating hrs
Clampable workpieces	Commercial steels, cast metals and non-ferrous metals
Table 7-1: General product data	

7.3 OPERATING MATERIALS

Lubricating grease	HWR Special lubricating grease OKS 265 (or other grease accepted by HWR)
Table 7-2: Operating materials	

NOTICE ***The special lubricating grease OKS 265 (or other grease accepted by HWR) can only be obtained from HWR Spanntechnik GmbH.***

7.4 AMBIENT CONDITIONS

Factory	For temperature range see the operating manual of the tools
Storage	No temperature restrictions
Relative humidity	5-85 %
Installation location of the machine tool	Level, firm ground adequately ventilated
Table 7-3: Ambient conditions	

7.5 OTHER DOCUMENTS

Spare parts list Declaration of incorporation
Table 7-4: Other documents

7.6 CLAMPING FORCE / TORQUE DIAGRAMS

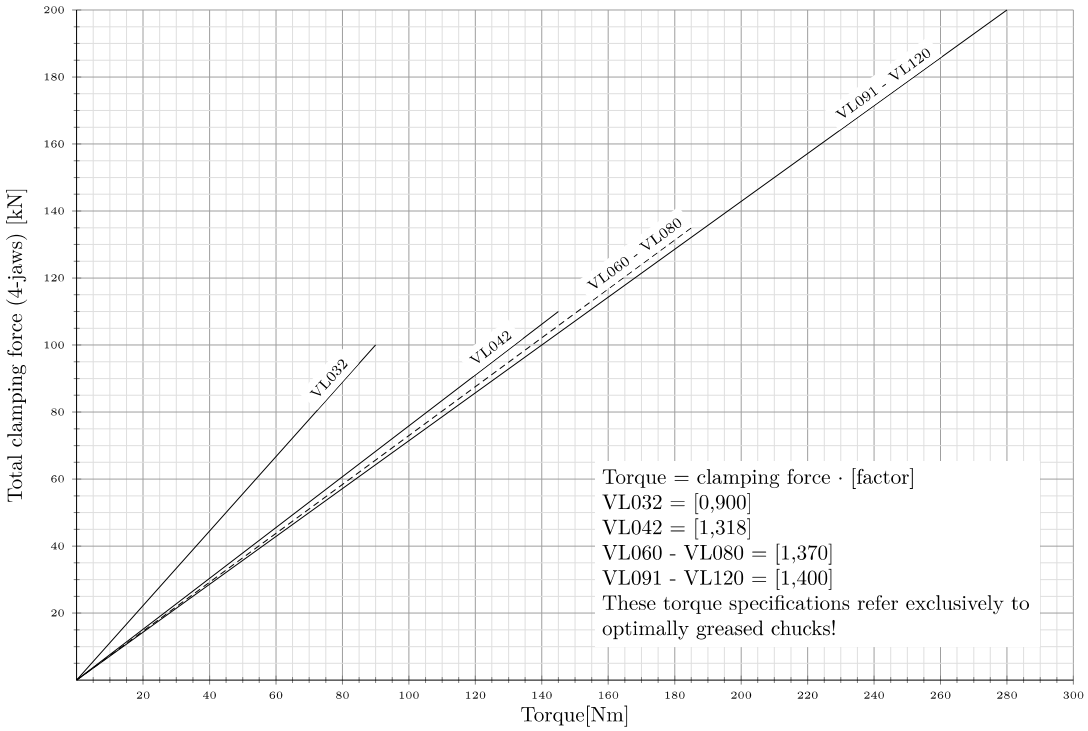

7.7 CLAMPING FORCE/SPEED DIAGRAMS

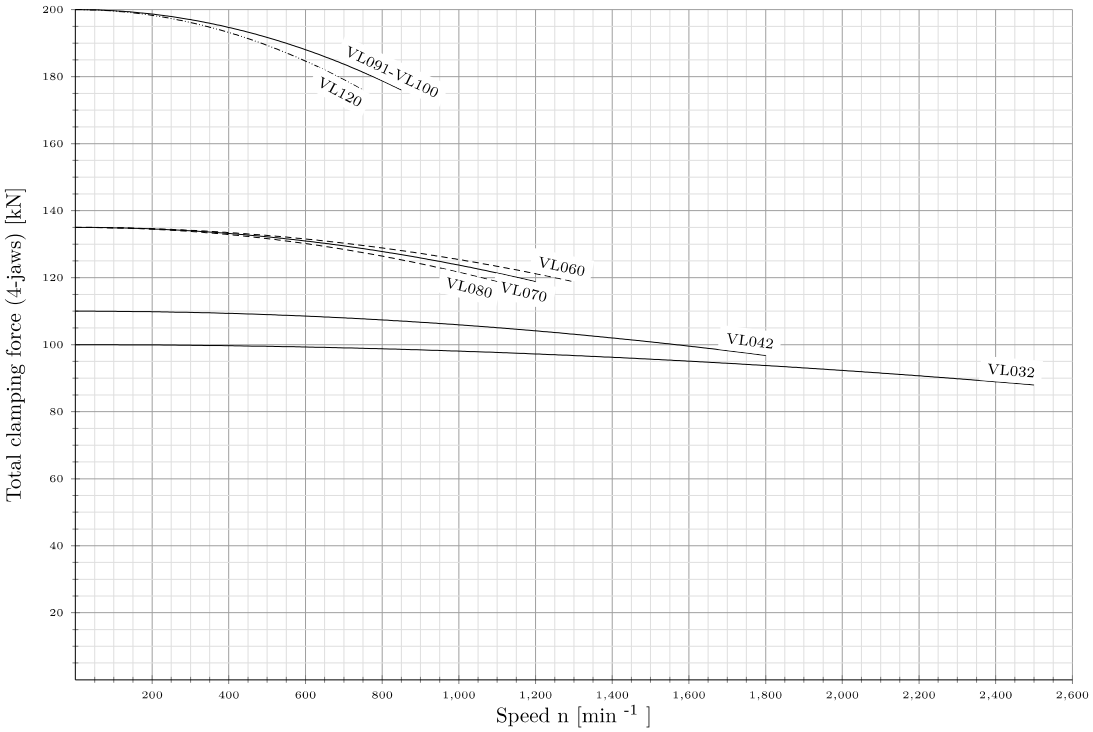

© Copyright
HWR Spanntechnik GmbH

7.8 TECHNICAL DATA

Type		VL032	VL042	VL060	VL070	VL080	VL091	VL100	VL120
Ident-No.		846032	846042	846060	846070	846081	846091	846100	846120
Diameter	mm	325	420	600	700	800	910	990	1150
Radial jaw stroke per jaw	mm	5,2	5,2	11,1	11,1	11,1	11,3	11,3	11,3
Compensation per jaw	mm	3,6	3,5	9,1	9,1	9,1	9,3	9,3	9,3
max. tightening torque	Nm	90	145	185	185	185	280	280	280
max. clamping force	kN	100	110	135	135	135	200	200	200
max. speed *	1/min	2500	1800	1300	1200	1100	850	850	750
Weight (without jaws)	kg	52	84	174	210	256	487	535	666
Moment of inertia	kg·m²	0,6	1,55	6,18	10,0	16,1	36,8	52,3	86,7
max. workpiece weight**	kg	260	320	400	500	500	550	600	600
Standard T-nut	--	GP11	GP11	GP11	GP11	GP11	GP13	GP13	GP13
Standard jaws	--	Please see our chuck data sheets which you will find in our clamping jaws finder under https://hwr-usa.com/produkte/unijaws-en							

Table 7-5: Technical data

* Balance quality acc. to DIN ISO 1940-1: G 6,3 (ungreased)
** for exceeding workpiece weights a support on the chuckbody has to be utilised

NOTICE

In case of differing data the data signed on the chuck is of relevance

NOTICE

Max. clamping diameter = chuck diameter

© Copyright
HWR Spanntechnik GmbH

7.9 MOUNTING DIMENSIONS

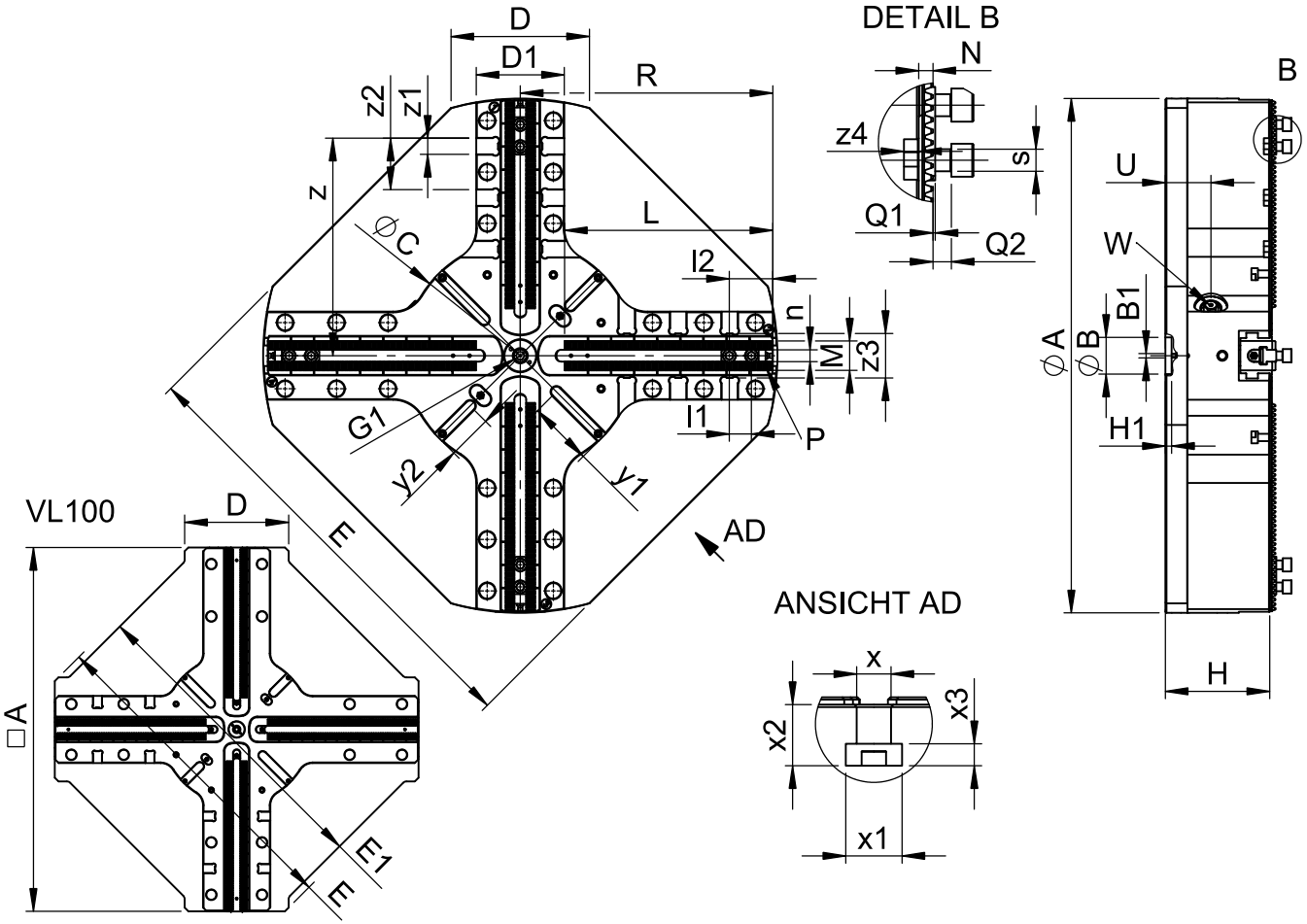

Fig. 7-1: Mounting dimensions [Subject to technical change]

© Copyright
HWR Spanntechnik GmbH

Type		VL032	VL042	VL060	VL070	VL080	VL091	VL100	VL120
A	mm	325	420	600	700	800	910	990	1150
B *G7*	mm	50	50	50	50	50	50	50	50
B1	mm	M6 [7,4 deep]	M6 [7,4 deep]	M6 [6,2 deep]	M6 [6,2 deep]	M6 [6,2 deep]	M6 [12 deep]	M6 [12 deep]	M6 [12 deep]
C	mm	Ø212	Ø250	Ø315	Ø315	Ø315	Ø410	Ø410	Ø410
D	mm	116	149	188	188	241,4	283	283	283
D1	mm	116	116	120	120	120	183	183	183
E	mm	297	383	535,8	610	710	800	886	989
E1	mm		-	-	-	-	-	846	-
G1	mm	M12 [18 deep]	M12 [20 deep]	M20 [22 deep]	M20 [22 deep]	M20 [22 deep]	M20 [22 deep]	M20 [22 deep]	M20 [22 deep]
H	mm	113	121	142	142	142	176,5	176,5	176,5
H1	mm	8,6	8,6	8,6	8,6	8,6	8,6	8,6	8,6
L	mm	129	168	233	284	333,5	377,7	415	490,8
M	mm	40	40	40	40	40	55	55	55
N	mm	5	5	7,8	7,8	7,8	9,8	9,8	9,8
P	mm	1,5 x 60°	1,5 x 60°	Modul 2	Modul 2	Modul 2	Mpdul 2	Modul 2	Modul 2
Q1	mm	3	3	1,2	1,2	1,2	2,5	2,5	2,5
Q2	mm	11,4	11,4	10	10	10	10	10	10

Table 7-6: Mounting dimensions

© Copyright
HWR Spanntechnik GmbH

Type			VL032	VL042	VL060	VL070	VL080	VL091	VL100	VL120
Chuck open	**R**	mm	160,9	209,1	299,4	349,4	399,4	454,3	495,5	574,3
	U	mm	49	53	62	62	62	78	78	78
Wrench width	**W**	mm	12	17	17	17	17	21	21	21
	l1	mm	30	30	30	30	30	30	30	30
min. / max.	**l2**	mm	41 / 110,5	41 / 148	41 / 225	41 / 279	41 / 328	43 / 359	43 / 399	43 / 482
	n H8	mm	16	16	16	16	16	21	21	21
	s		M12 x 30	M12 x 30	M12 x 30	M12 x 30	M12 x 30	M16 x 35	M16 x 35	M16 x 35
	x H12	mm	-	14	14	14	14	22	22	22
	x1	mm	-	23	23	23	23	37	37	37
	x2	mm	-	25	25	25	25	38	38	38
	x3	mm	-	9	9	9	9	16	16	16
	y1	mm	-	52	88	88	88	105	105	105
	y2	mm	-	52	68	68	61	63	63	63
	z	mm	110	170	246	265	356	350,8	390,8	465,8
	z1 G7	mm	20	20	20	20	22	24	24	24
	z2	mm	-	50	70	70 (2x)	70 (2x)	-	142,5	142,5
	z3	mm	71,5	71,5	60,5	60,5	60,5	118,5	118,5	118,5
	z4	mm	6	8	8	8	8	8	8	8

Table 7-6: Mounting dimensions [continued]

© Copyright
HWR Spanntechnik GmbH

7.10 MAXIMUM TIGHTENING TORQUE FOR MOUNTING SCREWS

Strength class	Standard	Thread								
		M5	M6	M8	M10	M12	M14	M16	M20	M24
		max. tightening torque [Nm]								
12.9	ISO 4762 (DIN 912)	10	16	30	50	70	105	150	220	450
10.9	ISO 4762 (DIN 912)	8	12	25	42	58	88	125	180	350

Table 7-7: Maximum tightening torque for mounting screws

© Copyright
HWR Spanntechnik GmbH

8 SPARE PARTS

8.1 GENERAL INFORMATION

Replacement parts may be required for the maintenance and repair of the INOFlex® chuck.

This chapter informs you about what information you should have available when ordering replacement parts from the manufacturer HWR Spanntechnik GmbH.

8.2 BASIC INFORMATION REQUIRED FOR ORDERING SPARE PARTS

- Size: e. g. INOFlex® VL070
- Identification number (Id No.)
- Name of the spare part
- Order quantity

8.3 SPARE PARTS ORDER VIA E-MAIL

NOTICE ***Please observe the minimum information requirements (see section 8.2 "Basic information about ordering spare parts").***

We recommend the following procedure when ordering a replacement part:

Step 1 Look for the desired part in figure 8-1 or 8-2.

Step 2 Enter the minimum required order information in the e-mail (see Section 8.2).

Step 3 Send the order to HWR Spanntechnik GmbH using your company address.

NOTICE ***The e-mail address can be found on the inside of the front cover of this operating manual.***

© Copyright
HWR Spanntechnik GmbH

8.4 SPARE PARTS LISTS INOFLEX® VL032 - VL120

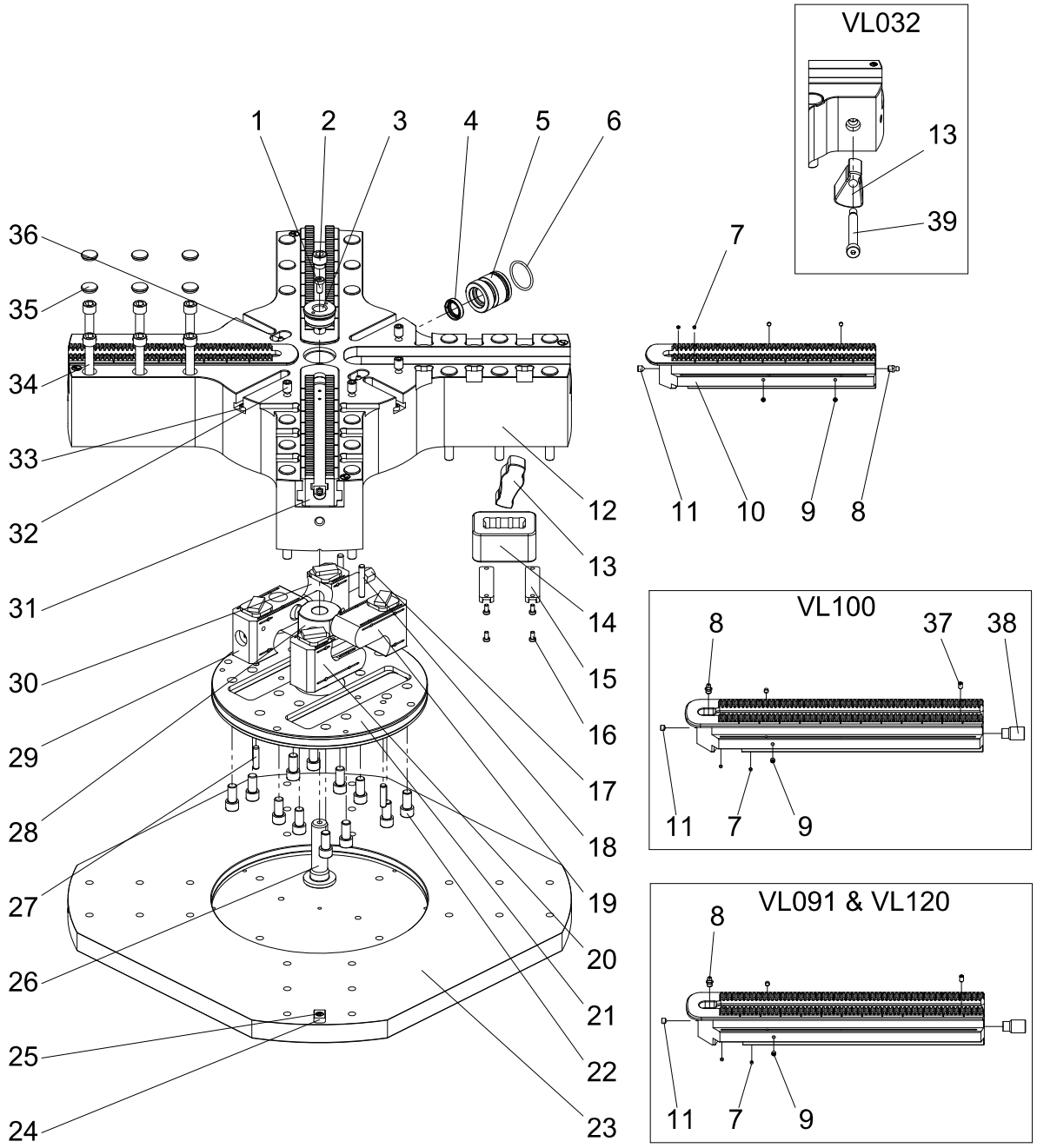

Fig. 8-1: Spare parts INOFlex® VL032 – VL120

Pos.	Description	Quantity							
		VL032	VL042	VL060	VL070	VL080	VL091	VL100	VL120
1	Flat or countersunk head screw	1	1	1	1	1	1	1	1
2	Threaded pin	1	1	1	1	1	1	1	1
3	Threaded insert	1	1	1	1	1	1	1	1
4	Shaft seal ring or O-ring	1	1	1	1	1	1	1	1
5	Seal-kit	1	1	1	1	1	1	1	1
6	O-ring	1	1	1	1	1	1	1	1
7	Threaded pin	8	8	8	8	8	8	8	8
8	Grease nipple	4	4	4	4	4	4	4	4
9	Threaded pin	8	8	16	16	16	8	8	8
10	Base jaw 1 / 3	2	2	2	2	2	2	2	2
11	Threaded pin	4	4	4	4	4	4	4	4
12	Upper housing	1	1	1	1	1	1	1	1
13	Lever	4	4	4	4	4	4	4	4
14	Counterweight	-	4	4	4	4	4	4	4
15	Tab	-	8	8	8	12	12	12	12
16	Cylinder head bolt	-	16	16	16	24	24	24	24
17	Spindle	1	1	1	1	1	1	1	1
18	Cylinder pin	1	2	2	2	2	2	2	2
19	Parallel slider 1	1	1	1	1	1	1	1	1
20	Parallel slider 2	1	1	1	1	1	1	1	1
21	Lower housing	1	1	1	1	1	1	1	1

Table 8-1: Spare parts INOFlex® VL032 – VL120

© Copyright
HWR Spanntechnik GmbH

Pos.	Description	Quantity							
		VL032	VL042	VL060	VL070	VL080	VL091	VL100	VL120
22	Cylinder head bolt	6	6	12	12	12	6	6	6
23	Base plate	1	1	1	1	1	1	1	1
24	Cylinder head bolt	1	1	1	1	1	1	1	1
25	Aligning T-nut	1	1	1	1	1	1	1	1
26	Pivot bolt	1	1	1	1	1	1	1	1
27	Cylinder pin	2	2	2	2	2	2	2	2
28	Clamping bone	2	2	2	2	2	2	2	2
29	Parallel slider 3	1	1	1	1	1	1	1	1
30	Parallel slider 4	1	1	1	1	1	1	1	1
31	Base jaw 2 / 4	2	2	2	2	2	2	2	2
32	Threaded pin	-	3	4	4	16	-	4	-
33	Cylinder head bolt	-	4	4	4	4	4	4	4
34	Cylinder head bolt	4	20	16	24	24	6	16	24
35	Cap	4	20	16	24	24	16	16	24
36	Grease nipple	2	2	2	2	2	2	2	2
37	Threaded pin	-	-	-	-	-	-	4	-
38	Threaded pin	-	-	-	-	-	-	4	-
39	Fitting bolt	4	-	-	-	-	-	-	-

Table 8-1: Spare parts INOFlex® VL032 – VL120 [continued]

9 NOTES

9.1 CLAMPING/ACTUATING FORCE DIAGRAM (TEMPLATES)

Chuck-type: Serial no.: Date:

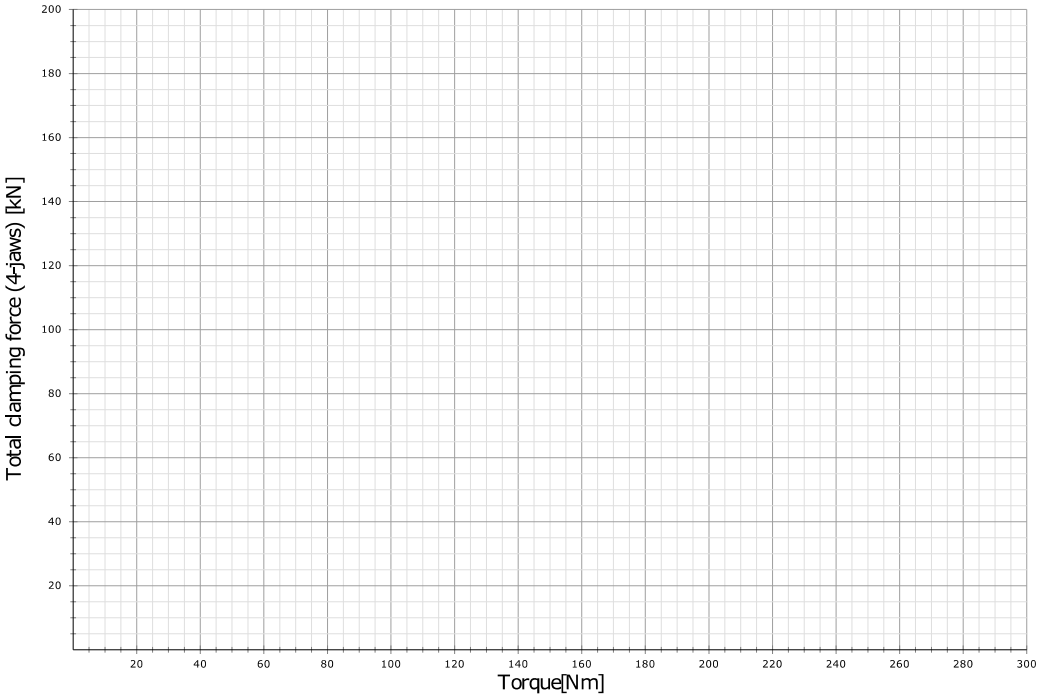

Chuck-type: Serial no.: Date:

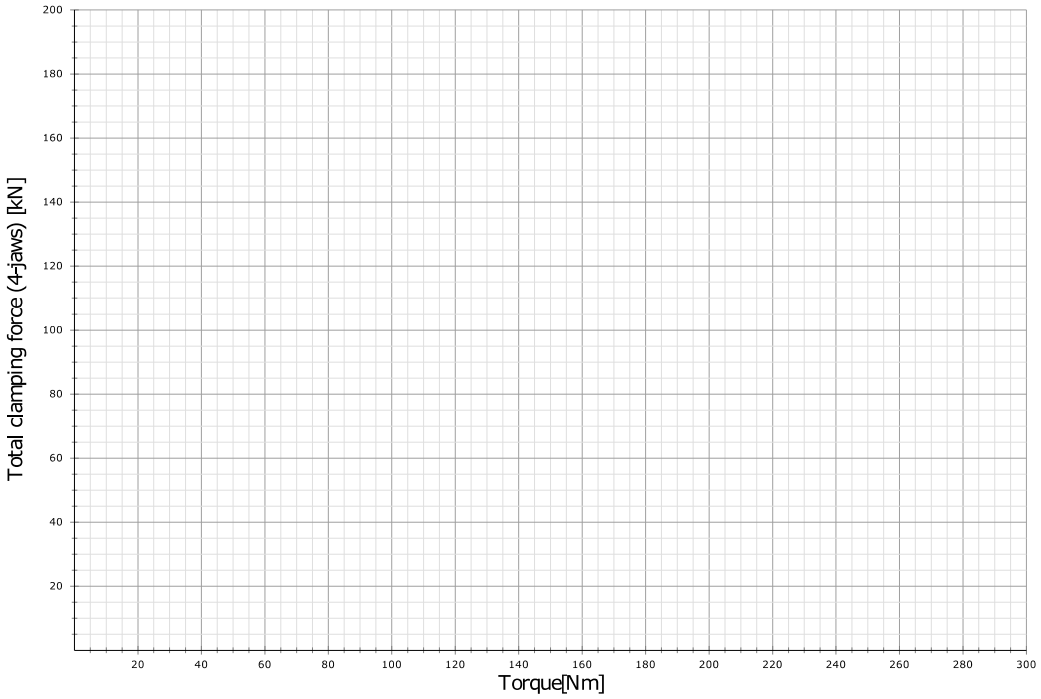

© Copyright
HWR Spanntechnik GmbH